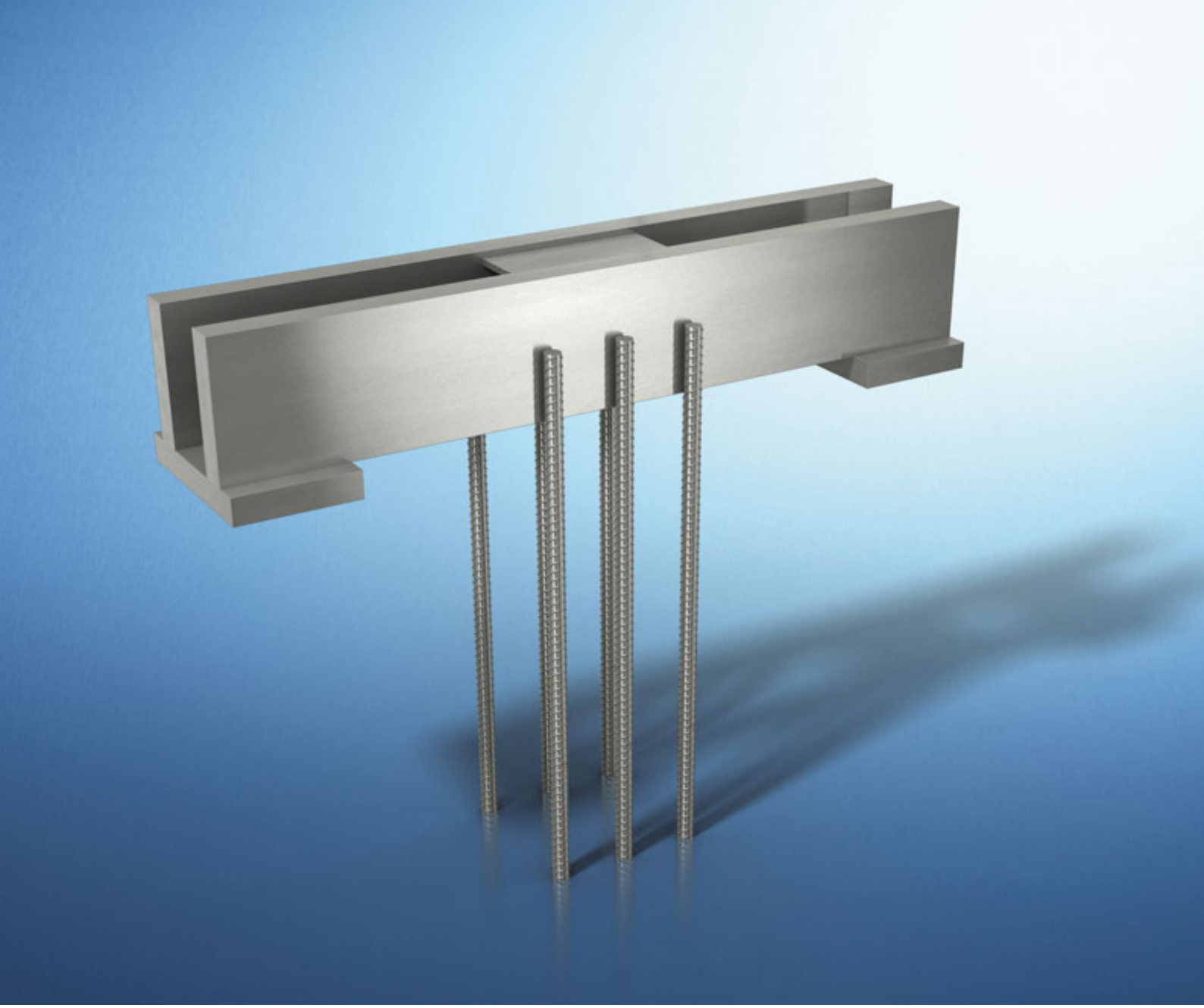

PBH corbel

Version: **Peikko Group 4/2011**

CERTIFIED inspecta ORGANIZATION
ISO 9001
ISO 14001

CONTENTS

1. DESCRIPTION OF THE SYSTEM 3
2. SYSTEM ADVANTAGES 3
3. GEOMETRY AND CAPACITIES 3
4. INSTALLATION 4
5. PLACING OF REINFORCEMENT 5
6. APPLICATION 6
6.1 General information 6
6.2 Reinforcement 6
7. DESIGN TABLES 8
7.1 Design table 1 8
7.2 Design table 2 9
7.3 Design table 3 10
7.3 Design table 4 11

1. DESCRIPTION OF THE SYSTEM

PBH corbels are essentially steel assemblies allowing TT slabs to be placed on supporting beams without the necessity of beam flanges or dapped ends on the TT slabs.

During erecting state, the dead loads of the precast concrete element and the in situ topping are carried by the PBH corbel and transfered from the TT-slab to the supporting structure.

In final state, what means that the in situ topping is hardened, the PBH corbel and the concrete slab provide a certain share of the total capacity of the construction.

The total capacity of the construction results from the bearing capacity of the PBH corbel in erecting state and the bearing capacity of the slab.

Loads that are applied after hardening of the in situ topping have to be limited to the value of $V_{Rd,tot}$-$V_{Rd,erect}$.

Values $V_{Rd,tot}$ and $V_{Rd,erect}$ are indicated in the design tables 1 to 4.

Figure 1. PBH corbels as TT slab support

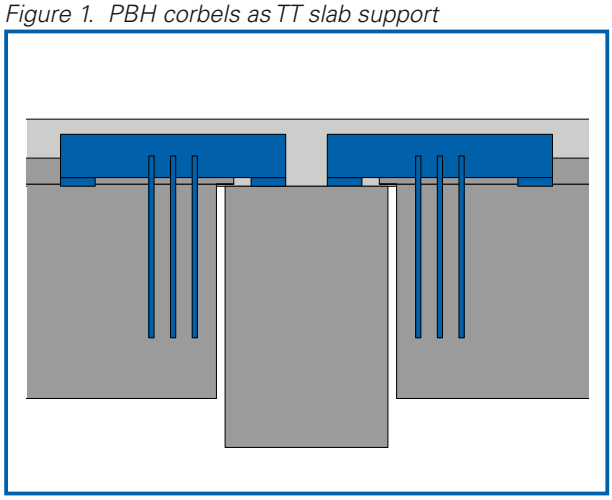

Figure 2. One side connection

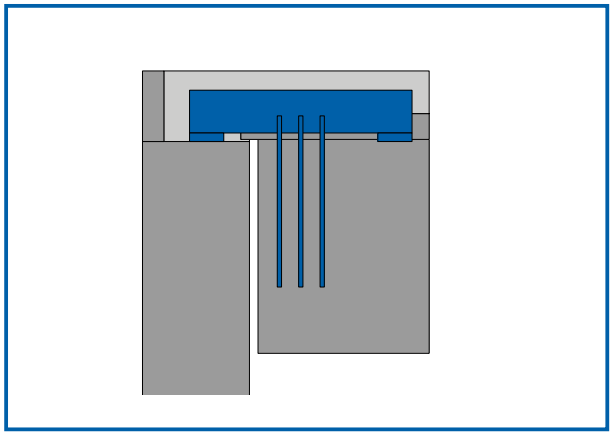

2. SYSTEM ADVANTAGES

- simple formwork, no dapped ended beams
- quick and easy reinforcing process
- less reinforcement and concrete needed
- saving of construction height
- cost and working time saving
- high bearing capacities
- less load eccentricities for the supporting beam (torsion)
- easy dimensioning with design tables
- no additional support during erecting time neded
- high fire resistance

3. GEOMETRY AND CAPACITIES

Figure 3. Geometry

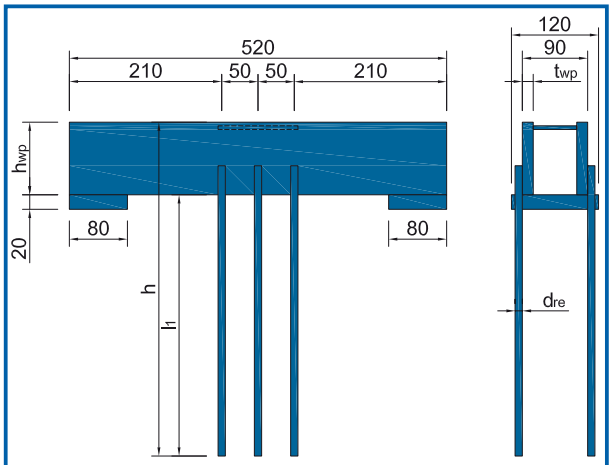

type	h_{wp}	t_{wp}	h	l_1 (*)	d_{re}
PBH 1	100	15	410	310	12
PBH 2	100	20	490	390	12
PBH 3	120	15	610	490	12
PBH 4	120	20	620	500	14

all dimensions in [mm]

(*) l_1 has to be shortened to h_w - 50 mm if necessary

Bearing capacities of PBH corbel in erecting state

type	$V_{Rd,erect}$ (*)
PBH 1	80 kN
PBH 2	100 kN
PBH 3	125 kN
PBH 4	150 kN

(*) in case of small web heights h_w for the TT-slab, $V_{Rd,erect}$ has to reduced according to design tables 1 to 4.

4. INSTALLATION

For the installation the PBH corbels should be put into the reinforcement cage, which is not yet placed into the mould and fixed temporary by binding wire to the reinforcement cage.

The wire fixation should remain always detachable in order not prevent the later on accurate alignment of the PBH corbels to the mould.

Afterwards the reinforcement cage is ready to be placed inside the mould.

Figure 4. Placing the reinforcement cage into the mould

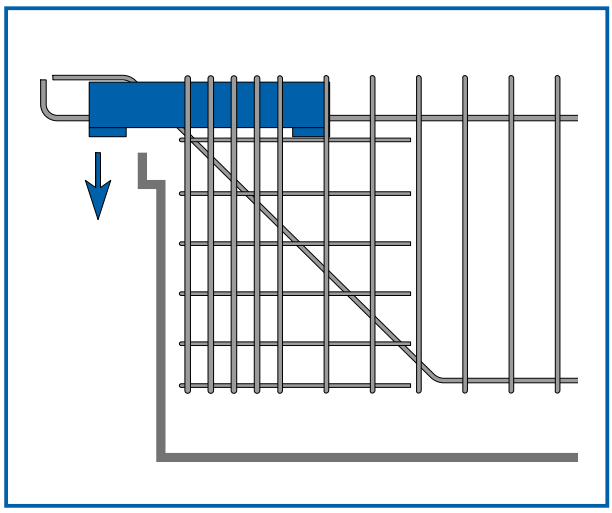

Then the additional reinforcement in the concrete slab area can be added. For the installation of reinforcement, the regulations acc. EN 1992-1-1 have to be considered.

Figure 5. Adding of additional slab reinforcement

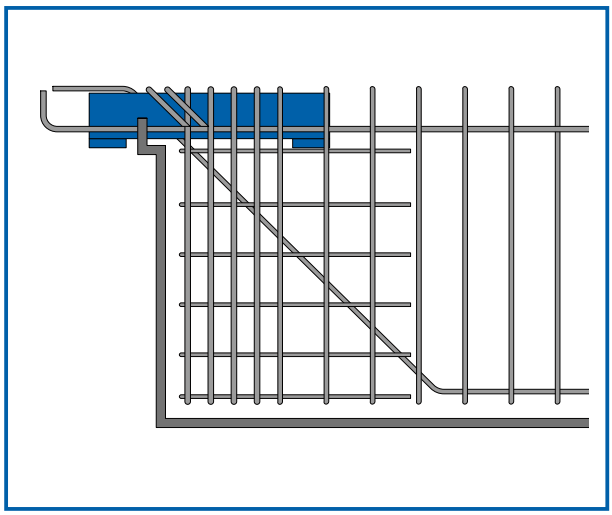

After reinforcing the PBH corbels have to be aligned in longitudinal and lateral direction with the formwork and fixed properly and undisplaceable by screwing or clamping construction.

Figure 6. Alignment in longitudinal and lateral direction

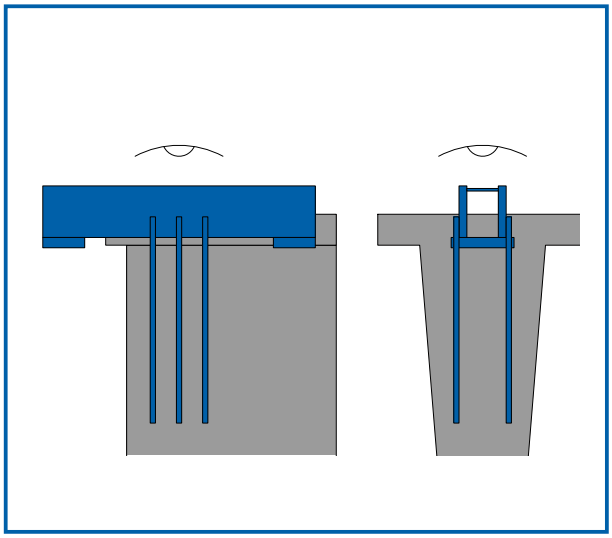

After the alignment of the PBH corbels the TT slab is ready for casting.

When stripping the casted elements from the mould, make sure, that the outsticking reinforcement and the yoint between precasted and in situ slab is free of loose concrete rests or impurities.

For the installation of the TT slab on site the following assembling dimensions have to considered:

Figure 7. Installation dimensions for the TT slab

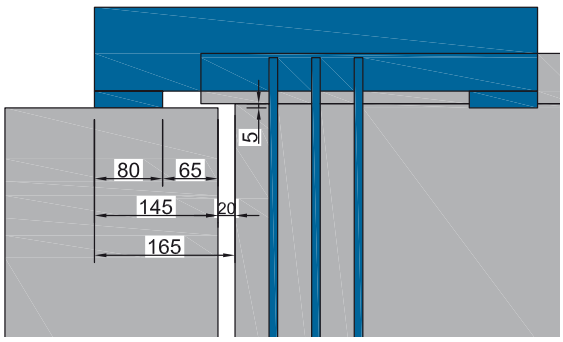

all dimensions in [mm]

5. PLACING OF REINFORCEMENT

The placing of additional reinforcement acc. design tables has to be done acc. figure 8.

Figure 8. Placing of additional reinforcement

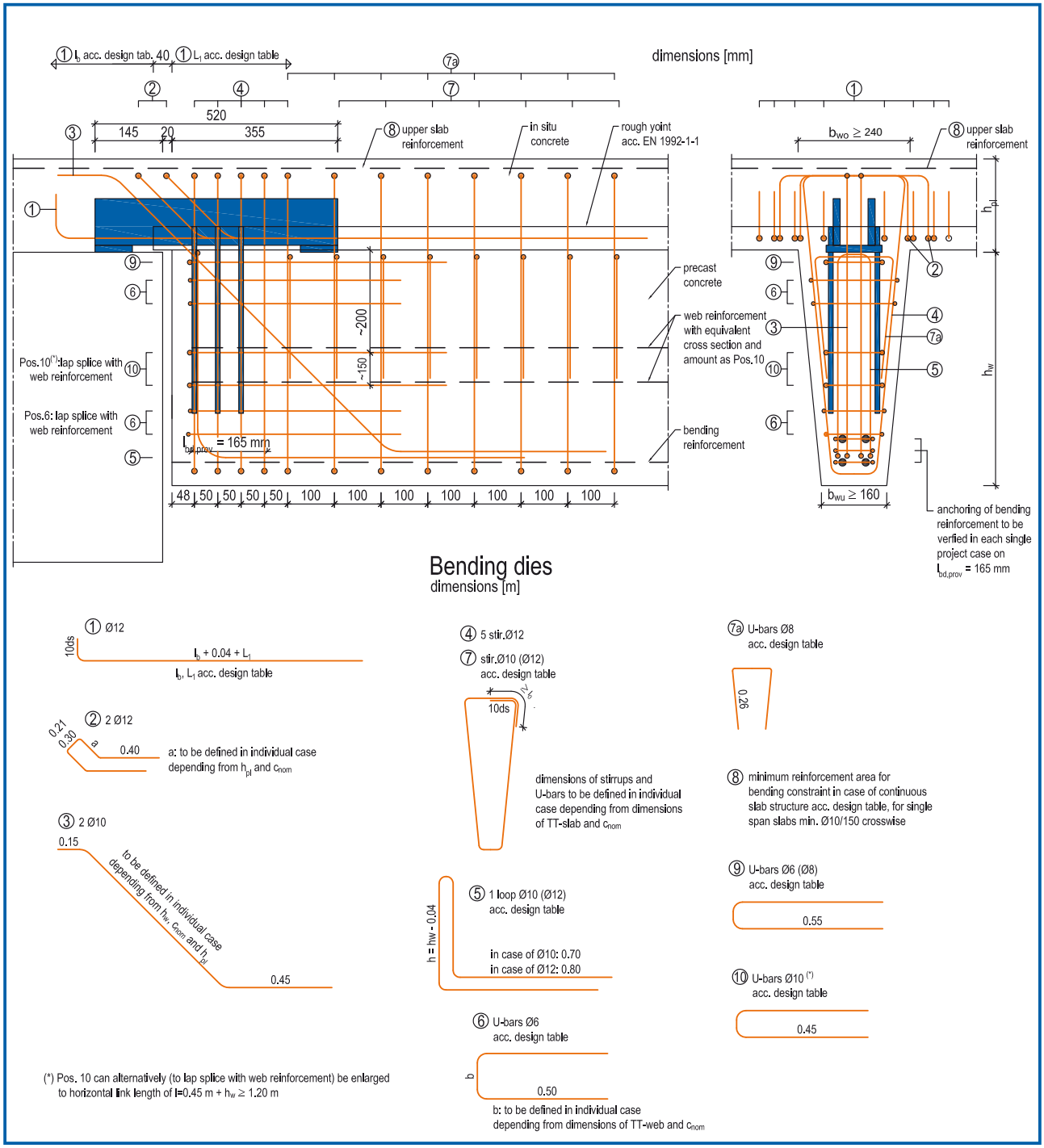

6. APPLICATION

6.1. General information

MATERIALS:

Plates:	S355, S235
Reinforcing steel:	B 500
In-situ concrete:	≥ C20/25
Precast:	≥ C35/45

LOADS:
Static loads according to EN 1991-1-1

FIRE RESISTANCE:
The construction provides a fire resistance of 90 minutes.

CORROSION PROTECTION:
The calculation of additional reinforcement acc. design tables 1 to 4 is based on a general concrete cover of 30 mm. In case of higher requirements the concrete cover has to be increased appropriately.

The lower concrete cover for the web plates of the PBH corbel is in the yoint area about 15 mm. If necessary, an additional corrosion protection should be added.

INSTALLATION, CASTING:
For the installation of reinforcement, the regulations acc. EN 1992-1-1 have to be considered.
The maximun aggregate size should correlate with the placing of reinforcement and the concrete has to be compacted properly.

MINIMUM WEB WIDTHS OF TT-SLAB:

Minimum lower web width (b_{wu}) :	160 mm
Minimum upper web width (b_{wo}) :	200 mm

The yoint between precast and in situ concrete cross section has to be produced as a rough yoint in accordance with EN 1992-1-1, 6.2.5.

6.2. Reinforcement

POSITION 1:
TENSION TIE OF THE CONCRETE CORBEL
Bars Ø12 with hooked ends (90°) above the supporting structure. Maximum 4 bars at each side of the PBH corbel, required number according design table. In the area of hooked ends at least 1 transversal bar Ø12. The anchoring length above the supporting structure has to be at least l_b acc. design table. The length inside the precast structure has to be at least L_1 acc. design table.

POSITION 2:
45° INCLINED LOOPS
2 loops Ø12.

POSITION 3:
45° INCLINED BAR
2 bars Ø10.

POSITION 4:
HANGER REINFORCEMENT
5 stirrups Ø12.

POSTION 5:
HANGER REINFORCEMENT AT THE FRONT SIDE OF THE TT-SLAB
1 bended loop Ø10 (Ø12).

POSITION 6:
TRANSVERSE REINFORCEMENT IN THE LAP ZONE
U-bars Ø6 according design table.

POSITION 7:
VERTICAL STIRRUPS
Stirrups Ø10/100, (Ø12/100) according design table.

POSITION 7a:
VERTICAL U-BARS
U-bars Ø8/100 according design table

POSITION 8:
UPPER MINIMUM SLAB REINFORCEMENT
Minimum reinforcement area for crack control with max. crack width of w_k = 0,3 mm and bar Ø10 mm. In case of continiuous slabs with max. bar distance acc. design table, for single span slabs min. Ø10/150.
This recommendation does not replace the proper static design of slab itself, what remains to be done in each individual case.

POSITION 9:
HORIZONTAL U-BAR
1 U-bar Ø6 (Ø8) for longitudinal forces in the range of 0.2 $V_{Ed,erect}$ due to potential friction between the bearing plate of the PBH corbel and concrete.

POSITION 10:
HORIZONTAL U-BARS
U-bars Ø10 according design table to be lap spliced with present and equivalent web reinforcement of TT-slab.

ANCHORING OF THE BENDING REINFORCEMENT:

The anchoring of the TT-slabs lower bending reinforcement has to be verified in every individual case. To consider the effect of indirect support in the anchorage zone, at least the tension force Z_{Ed} according relevant design table has to be anchored on the provided anchorage length of $l_{bd,prov}$ = 165 mm.

In case of not sufficient anchoring conditions, the use additional reinforcement consisting of U-bars in the anchorage zone is recommended.

OPENINGS IN THE SUPPORTING AREA:

In the supporting area of supporting beam and TT-slab it is not allowed to have any openings on a width of b_{wo}+ h_{pl} according figure 11.

Figure 10. Openings in the supporting area

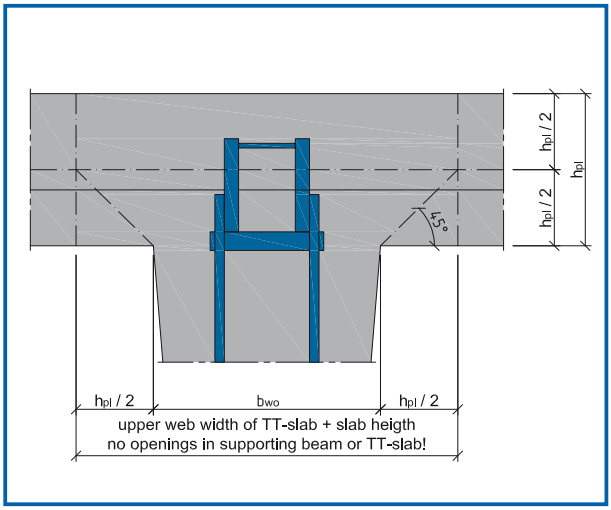

7. DESIGN TABLES

Design table 1

PBH 1, $V_{Ed,erect}$ = 80 kN

slab height h_{pl} [mm]	web height h_w [mm]	support reaction erecting state $V_{Rd,erect}$ [kN]	support reaction final state $V_{Rd,tot}$ [kN]	anchoring force Z_{Ed} [kN]	reinforcement Pos.1	Pos.1 l_b [m]	Pos.1 L_1 [m]	Pos.2	Pos.3	Pos.4	Pos.5	Pos.6	Pos.7	Pos.7a	Pos.8 [mm]	Pos.9	Pos.10
150	300	80	223	311	8Ø12	0,29	0,94	2Ø12	2Ø10	5Ø12	1Ø10	4Ø6	5Ø10	6Ø8	Ø10/210	1Ø6	-
	400	80	223	256	8Ø12	0,29	1,08	2Ø12	2Ø10	5Ø12	1Ø10	4Ø6	5Ø10	6Ø8	Ø10/210	1Ø6	-
	500	80	223	164	8Ø12	0,29	1,35	2Ø12	2Ø10	5Ø12	1Ø10	5Ø6	6Ø10	7Ø8	Ø10/210	1Ø6	2Ø10
	600	80	223	164	8Ø12	0,29	1,63	2Ø12	2Ø10	5Ø12	1Ø10	6Ø6	7Ø10	8Ø8	Ø10/210	1Ø6	2Ø10
	700	80	223	164	8Ø12	0,29	1,90	2Ø12	2Ø10	5Ø12	1Ø10	7Ø6	8Ø10	9Ø8	Ø10/210	1Ø6	3Ø10
	800	80	223	164	8Ø12	0,29	2,17	2Ø12	2Ø10	5Ø12	1Ø10	8Ø6	9Ø10	10Ø8	Ø10/210	1Ø6	3Ø10
160	300	80	235	302	8Ø12	0,28	0,88	2Ø12	2Ø10	5Ø12	1Ø10	4Ø6	5Ø10	6Ø8	Ø10/200	1Ø6	-
	400	80	235	246	8Ø12	0,28	1,01	2Ø12	2Ø10	5Ø12	1Ø10	4Ø6	5Ø10	6Ø8	Ø10/200	1Ø6	-
	500	80	238	157	8Ø12	0,29	1,26	2Ø12	2Ø10	5Ø12	1Ø10	5Ø6	6Ø10	7Ø8	Ø10/200	1Ø6	2Ø10
	600	80	238	157	8Ø12	0,29	1,50	2Ø12	2Ø10	5Ø12	1Ø10	6Ø6	7Ø10	8Ø8	Ø10/200	1Ø6	2Ø10
	700	80	238	157	8Ø12	0,29	1,75	2Ø12	2Ø10	5Ø12	1Ø10	7Ø6	8Ø10	9Ø8	Ø10/200	1Ø6	3Ø10
	800	80	238	157	8Ø12	0,29	2,00	2Ø12	2Ø10	5Ø12	1Ø10	8Ø6	9Ø10	10Ø8	Ø10/200	1Ø6	3Ø10
170	300	80	235	285	8Ø12	0,26	0,82	2Ø12	2Ø10	5Ø12	1Ø10	4Ø6	5Ø10	6Ø8	Ø10/190	1Ø6	-
	400	80	253	241	8Ø12	0,29	0,95	2Ø12	2Ø10	5Ø12	1Ø10	4Ø6	5Ø10	6Ø8	Ø10/190	1Ø6	-
	500	80	253	150	8Ø12	0,29	1,18	2Ø12	2Ø10	5Ø12	1Ø10	5Ø6	6Ø10	7Ø8	Ø10/190	1Ø6	2Ø10
	600	80	253	150	8Ø12	0,29	1,40	2Ø12	2Ø10	5Ø12	1Ø10	6Ø6	7Ø10	8Ø8	Ø10/190	1Ø6	2Ø10
	700	80	253	150	8Ø12	0,29	1,63	2Ø12	2Ø10	5Ø12	1Ø10	7Ø6	8Ø10	9Ø8	Ø10/190	1Ø6	3Ø10
	800	80	253	150	8Ø12	0,29	1,86	2Ø12	2Ø10	5Ø12	1Ø10	8Ø6	9Ø10	10Ø8	Ø10/190	1Ø6	3Ø10
180	300	80	235	271	8Ø12	0,24	0,76	2Ø12	2Ø10	5Ø12	1Ø10	4Ø6	5Ø10	6Ø8	Ø10/180	1Ø6	-
	400	80	268	234	8Ø12	0,29	0,90	2Ø12	2Ø10	5Ø12	1Ø10	4Ø6	6Ø10	7Ø8	Ø10/180	1Ø6	-
	500	80	268	142	8Ø12	0,29	1,11	2Ø12	2Ø10	5Ø12	1Ø10	5Ø6	6Ø10	7Ø8	Ø10/180	1Ø6	2Ø10
	600	80	268	142	8Ø12	0,29	1,31	2Ø12	2Ø10	5Ø12	1Ø10	6Ø6	7Ø10	8Ø8	Ø10/180	1Ø6	2Ø10
	700	80	268	142	8Ø12	0,29	1,52	2Ø12	2Ø10	5Ø12	1Ø10	7Ø6	8Ø10	9Ø8	Ø10/180	1Ø6	3Ø10
	800	80	268	142	8Ø12	0,29	1,73	2Ø12	2Ø10	5Ø12	1Ø10	8Ø6	9Ø10	10Ø8	Ø10/180	1Ø6	3Ø10
190	300	80	235	265	8Ø12	0,22	0,72	2Ø12	2Ø10	5Ø12	1Ø10	4Ø6	5Ø10	6Ø8	Ø10/170	1Ø6	-
	400	80	283	233	8Ø12	0,29	0,85	2Ø12	2Ø10	5Ø12	1Ø10	4Ø6	5Ø12	6Ø8	Ø10/170	1Ø6	-
	500	80	283	142	8Ø12	0,29	1,04	2Ø12	2Ø10	5Ø12	1Ø10	5Ø6	6Ø10	7Ø8	Ø10/170	1Ø6	2Ø10
	600	80	283	142	8Ø12	0,29	1,24	2Ø12	2Ø10	5Ø12	1Ø10	6Ø6	7Ø10	8Ø8	Ø10/170	1Ø6	2Ø10
	700	80	283	142	8Ø12	0,29	1,43	2Ø12	2Ø10	5Ø12	1Ø10	7Ø6	8Ø10	9Ø8	Ø10/170	1Ø6	3Ø10
	800	80	283	142	8Ø12	0,29	1,62	2Ø12	2Ø10	5Ø12	1Ø10	8Ø6	9Ø10	10Ø8	Ø10/170	1Ø6	3Ø10
200	300	80	235	265	8Ø12	0,21	0,67	2Ø12	2Ø10	5Ø12	1Ø10	4Ø6	5Ø10	6Ø8	Ø10/160	1Ø6	-
	400	80	295	239	8Ø12	0,28	0,81	2Ø12	2Ø10	5Ø12	1Ø10	4Ø6	5Ø12	6Ø8	Ø10/160	1Ø6	-
	500	80	295	148	8Ø12	0,28	0,99	2Ø12	2Ø10	5Ø12	1Ø10	5Ø6	6Ø10	7Ø8	Ø10/160	1Ø6	2Ø10
	600	80	295	148	8Ø12	0,28	1,17	2Ø12	2Ø10	5Ø12	1Ø10	6Ø6	7Ø10	8Ø8	Ø10/160	1Ø6	2Ø10
	700	80	295	148	8Ø12	0,28	1,35	2Ø12	2Ø10	5Ø12	1Ø10	7Ø6	8Ø10	9Ø8	Ø10/160	1Ø6	3Ø10
	800	80	295	148	8Ø12	0,28	1,53	2Ø12	2Ø10	5Ø12	1Ø10	8Ø6	9Ø10	10Ø8	Ø10/160	1Ø6	3Ø10
210	300	80	235	265	6Ø12	0,26	0,68	2Ø12	2Ø10	5Ø12	1Ø10	4Ø6	5Ø10	6Ø8	Ø10/150	1Ø6	-
	400	80	298	240	8Ø12	0,27	0,77	2Ø12	2Ø10	5Ø12	1Ø10	4Ø6	5Ø12	6Ø8	Ø10/150	1Ø6	-
	500	80	313	157	8Ø12	0,29	0,95	2Ø12	2Ø10	5Ø12	1Ø10	5Ø6	6Ø12	7Ø8	Ø10/150	1Ø6	2Ø10
	600	80	313	157	8Ø12	0,29	1,12	2Ø12	2Ø10	5Ø12	1Ø10	6Ø6	7Ø10	8Ø8	Ø10/150	1Ø6	2Ø10
	700	80	313	157	8Ø12	0,29	1,29	2Ø12	2Ø10	5Ø12	1Ø10	7Ø6	8Ø10	9Ø8	Ø10/150	1Ø6	3Ø10
	800	80	313	157	8Ø12	0,29	1,46	2Ø12	2Ø10	5Ø12	1Ø10	8Ø6	9Ø10	10Ø8	Ø10/150	1Ø6	3Ø10
220	300	80	235	265	6Ø12	0,24	0,64	2Ø12	2Ø10	5Ø12	1Ø10	4Ø6	5Ø10	6Ø8	Ø10/140	1Ø6	-
	400	80	298	240	8Ø12	0,25	0,73	2Ø12	2Ø10	5Ø12	1Ø10	4Ø6	5Ø12	6Ø8	Ø10/140	1Ø6	-
	500	80	329	165	8Ø12	0,29	0,91	2Ø12	2Ø10	5Ø12	1Ø10	5Ø6	6Ø12	7Ø8	Ø10/140	1Ø6	2Ø10
	600	80	329	165	8Ø12	0,29	1,07	2Ø12	2Ø10	5Ø12	1Ø10	6Ø6	7Ø10	8Ø8	Ø10/140	1Ø6	2Ø10
	700	80	329	165	8Ø12	0,29	1,23	2Ø12	2Ø10	5Ø12	1Ø10	7Ø6	8Ø10	9Ø8	Ø10/140	1Ø6	3Ø10
	800	80	329	165	8Ø12	0,29	1,39	2Ø12	2Ø10	5Ø12	1Ø10	8Ø6	9Ø10	10Ø8	Ø10/140	1Ø6	3Ø10
230	300	80	235	265	6Ø12	0,23	0,61	2Ø12	2Ø10	5Ø12	1Ø10	4Ø6	5Ø10	6Ø8	Ø10/140	1Ø6	-
	400	80	298	241	8Ø12	0,24	0,70	2Ø12	2Ø10	5Ø12	1Ø10	4Ø6	5Ø12	6Ø8	Ø10/140	1Ø6	-
	500	80	343	172	8Ø12	0,29	0,88	2Ø12	2Ø10	5Ø12	1Ø10	5Ø6	6Ø12	7Ø8	Ø10/140	1Ø6	2Ø10
	600	80	343	172	8Ø12	0,29	1,03	2Ø12	2Ø10	5Ø12	1Ø10	6Ø6	7Ø12	8Ø8	Ø10/140	1Ø6	2Ø10
	700	80	343	172	8Ø12	0,29	1,18	2Ø12	2Ø10	5Ø12	1Ø10	7Ø6	8Ø10	9Ø8	Ø10/140	1Ø6	3Ø10
	800	80	343	172	8Ø12	0,29	1,32	2Ø12	2Ø10	5Ø12	1Ø10	8Ø6	9Ø10	10Ø8	Ø10/140	1Ø6	3Ø10
240	300	80	235	265	6Ø12	0,22	0,58	2Ø12	2Ø10	5Ø12	1Ø10	4Ø6	5Ø10	6Ø8	Ø10/130	1Ø6	-
	400	80	298	240	8Ø12	0,23	0,66	2Ø12	2Ø10	5Ø12	1Ø10	4Ø6	5Ø12	6Ø8	Ø10/130	1Ø6	-
	500	80	358	179	8Ø12	0,29	0,85	2Ø12	2Ø10	5Ø12	1Ø10	5Ø6	6Ø12	7Ø8	Ø10/130	1Ø6	2Ø10
	600	80	358	179	8Ø12	0,29	0,99	2Ø12	2Ø10	5Ø12	1Ø10	6Ø6	7Ø12	8Ø8	Ø10/130	1Ø6	2Ø10
	700	80	358	179	8Ø12	0,29	1,13	2Ø12	2Ø10	5Ø12	1Ø10	7Ø6	8Ø10	9Ø8	Ø10/130	1Ø6	3Ø10
	800	80	358	179	8Ø12	0,29	1,27	2Ø12	2Ø10	5Ø12	1Ø10	8Ø6	9Ø10	10Ø8	Ø10/130	1Ø6	3Ø10

L_1 = distance from the front end of TT-slab

l_b = anchorage length in the supporting area

in case of higher in situ concrete strength classes, lb can be reduced as: $l_b^* = lb \cdot \beta$

concrete	C25/30	C30/37	C35/35
β	0,84	0,75	0,68

in case of increased number of reinforcement Pos.1, lb can be reduced a: $l_b^* = lb \cdot A_{s,req} / A_{s,prov} \geq l_{b,min}$, $n_{P1} \leq 8$

Z_{Ed} = ancorage force for main bending reinforcement of TT-slab to be anchored on $l_{b,ind}$ = 165 mm, to be checked in every single case

Design table 2

PBH 2, $V_{Ed,erect}$ = 100 kN

slab height h_{pl} [mm]	web height h_w [mm]	support reaction erecting state $V_{Rd,erect}$ [kN]	support reaction final state $V_{Rd,tot}$ [kN]	anchoring force Z_{Ed} [kN]	reinforcement Pos.1	Pos.1 l_b [m]	Pos.1 L_1 [m]	Pos.2	Pos.3	Pos.4	Pos.5	Pos.6	Pos.7	Pos.7a	Pos.8 [mm]	Pos.9	Pos.10
150	300	84	227	320	8Ø12	0,29	0,94	2Ø12	2Ø10	5Ø12	1Ø10	4Ø6	5Ø10	6Ø8	Ø10/210	1Ø6	-
	400	100	244	289	8Ø12	0,29	1,08	2Ø12	2Ø10	5Ø12	1Ø10	4Ø6	5Ø10	6Ø8	Ø10/210	1Ø6	-
	500	100	244	175	8Ø12	0,29	1,35	2Ø12	2Ø10	5Ø12	1Ø10	5Ø6	6Ø10	7Ø8	Ø10/210	1Ø6	2Ø10
	600	100	244	175	8Ø12	0,29	1,63	2Ø12	2Ø10	5Ø12	1Ø10	6Ø6	7Ø10	8Ø8	Ø10/210	1Ø6	2Ø10
	700	100	244	175	8Ø12	0,29	1,90	2Ø12	2Ø10	5Ø12	1Ø10	7Ø6	8Ø10	9Ø8	Ø10/210	1Ø6	3Ø10
	800	100	244	175	8Ø12	0,29	2,17	2Ø12	2Ø10	5Ø12	1Ø10	8Ø6	9Ø10	10Ø8	Ø10/210	1Ø6	3Ø10
160	300	84	235	307	8Ø12	0,28	0,87	2Ø12	2Ø10	5Ø12	1Ø10	4Ø6	5Ø10	6Ø8	Ø10/200	1Ø6	-
	400	100	259	282	8Ø12	0,29	1,01	2Ø12	2Ø10	5Ø12	1Ø10	4Ø6	5Ø10	6Ø8	Ø10/200	1Ø6	-
	500	100	259	168	8Ø12	0,29	1,26	2Ø12	2Ø10	5Ø12	1Ø10	5Ø6	6Ø10	7Ø8	Ø10/200	1Ø6	2Ø10
	600	100	259	168	8Ø12	0,29	1,50	2Ø12	2Ø10	5Ø12	1Ø10	6Ø6	7Ø10	8Ø8	Ø10/200	1Ø6	2Ø10
	700	100	259	168	8Ø12	0,29	1,75	2Ø12	2Ø10	5Ø12	1Ø10	7Ø6	8Ø10	9Ø8	Ø10/200	1Ø6	3Ø10
	800	100	259	168	8Ø12	0,29	2,00	2Ø12	2Ø10	5Ø12	1Ø10	8Ø6	9Ø10	10Ø8	Ø10/200	1Ø6	3Ø10
170	300	84	235	291	8Ø12	0,25	0,82	2Ø12	2Ø10	5Ø12	1Ø10	4Ø6	5Ø10	6Ø8	Ø10/190	1Ø6	-
	400	100	274	275	8Ø12	0,29	0,95	2Ø12	2Ø10	5Ø12	1Ø10	4Ø6	5Ø12	6Ø8	Ø10/190	1Ø6	-
	500	100	274	160	8Ø12	0,29	1,18	2Ø12	2Ø10	5Ø12	1Ø10	5Ø6	6Ø10	7Ø8	Ø10/190	1Ø6	2Ø10
	600	100	274	160	8Ø12	0,29	1,40	2Ø12	2Ø10	5Ø12	1Ø10	6Ø6	7Ø10	8Ø8	Ø10/190	1Ø6	2Ø10
	700	100	274	160	8Ø12	0,29	1,63	2Ø12	2Ø10	5Ø12	1Ø10	7Ø6	8Ø10	9Ø8	Ø10/190	1Ø6	3Ø10
	800	100	274	160	8Ø12	0,29	1,86	2Ø12	2Ø10	5Ø12	1Ø10	8Ø6	9Ø10	10Ø8	Ø10/190	1Ø6	3Ø10
180	300	84	235	278	8Ø12	0,23	0,75	2Ø12	2Ø10	5Ø12	1Ø10	4Ø6	5Ø10	6Ø8	Ø10/180	1Ø6	-
	400	100	289	267	8Ø12	0,29	0,90	2Ø12	2Ø10	5Ø12	1Ø10	4Ø6	6Ø10	7Ø8	Ø10/180	1Ø6	-
	500	100	289	152	8Ø12	0,29	1,11	2Ø12	2Ø10	5Ø12	1Ø10	5Ø6	6Ø10	7Ø8	Ø10/180	1Ø6	2Ø10
	600	100	289	153	8Ø12	0,29	1,31	2Ø12	2Ø10	5Ø12	1Ø10	6Ø6	7Ø10	8Ø8	Ø10/180	1Ø6	2Ø10
	700	100	289	153	8Ø12	0,29	1,52	2Ø12	2Ø10	5Ø12	1Ø10	7Ø6	8Ø10	9Ø8	Ø10/180	1Ø6	3Ø10
	800	100	289	153	8Ø12	0,29	1,73	2Ø12	2Ø10	5Ø12	1Ø10	8Ø6	9Ø10	10Ø8	Ø10/180	1Ø6	3Ø10
190	300	84	235	271	6Ø12	0,29	0,76	2Ø12	2Ø10	5Ø12	1Ø10	4Ø6	5Ø10	6Ø8	Ø10/170	1Ø6	-
	400	100	298	263	8Ø12	0,28	0,85	2Ø12	2Ø10	5Ø12	1Ø10	4Ø6	5Ø12	6Ø8	Ø10/170	1Ø6	-
	500	100	304	152	8Ø12	0,29	1,04	2Ø12	2Ø10	5Ø12	1Ø10	5Ø6	6Ø10	7Ø8	Ø10/170	1Ø6	2Ø10
	600	100	304	152	8Ø12	0,29	1,24	2Ø12	2Ø10	5Ø12	1Ø10	6Ø6	7Ø10	8Ø8	Ø10/170	1Ø6	2Ø10
	700	100	304	152	8Ø12	0,29	1,43	2Ø12	2Ø10	5Ø12	1Ø10	7Ø6	8Ø10	9Ø8	Ø10/170	1Ø6	3Ø10
	800	100	304	152	8Ø12	0,29	1,62	2Ø12	2Ø10	5Ø12	1Ø10	8Ø6	9Ø10	10Ø8	Ø10/170	1Ø6	3Ø10
200	300	84	235	271	8Ø12	0,20	0,66	2Ø12	2Ø10	5Ø12	1Ø10	4Ø6	5Ø10	6Ø8	Ø10/160	1Ø6	-
	400	100	298	263	8Ø12	0,26	0,79	2Ø12	2Ø10	5Ø12	1Ø10	4Ø6	5Ø12	6Ø8	Ø10/160	1Ø6	-
	500	100	319	159	8Ø12	0,29	0,99	2Ø12	2Ø10	5Ø12	1Ø10	5Ø6	6Ø12	7Ø8	Ø10/160	1Ø6	2Ø10
	600	100	319	159	8Ø12	0,29	1,17	2Ø12	2Ø10	5Ø12	1Ø10	6Ø6	7Ø10	8Ø8	Ø10/160	1Ø6	2Ø10
	700	100	319	159	8Ø12	0,29	1,35	2Ø12	2Ø10	5Ø12	1Ø10	7Ø6	8Ø10	9Ø8	Ø10/160	1Ø6	3Ø10
	800	100	319	159	8Ø12	0,29	1,53	2Ø12	2Ø10	5Ø12	1Ø10	8Ø6	9Ø10	10Ø8	Ø10/160	1Ø6	3Ø10
210	300	84	235	271	6Ø12	0,25	0,68	2Ø12	2Ø10	5Ø12	1Ø10	4Ø6	5Ø10	6Ø8	Ø10/150	1Ø6	-
	400	100	298	263	8Ø12	0,24	0,75	2Ø12	2Ø10	5Ø12	1Ø10	4Ø6	5Ø12	6Ø8	Ø10/150	1Ø6	-
	500	100	334	167	8Ø12	0,29	0,95	2Ø12	2Ø10	5Ø12	1Ø10	5Ø6	6Ø12	7Ø8	Ø10/150	1Ø6	2Ø10
	600	100	334	167	8Ø12	0,29	1,12	2Ø12	2Ø10	5Ø12	1Ø10	6Ø6	7Ø10	8Ø8	Ø10/150	1Ø6	2Ø10
	700	100	334	167	8Ø12	0,29	1,29	2Ø12	2Ø10	5Ø12	1Ø10	7Ø6	8Ø10	9Ø8	Ø10/150	1Ø6	3Ø10
	800	100	334	167	8Ø12	0,29	1,46	2Ø12	2Ø10	5Ø12	1Ø10	8Ø6	9Ø10	10Ø8	Ø10/150	1Ø6	3Ø10
220	300	80	235	265	6Ø12	0,24	0,64	2Ø12	2Ø10	5Ø12	1Ø10	4Ø6	5Ø10	6Ø8	Ø10/140	1Ø6	-
	400	100	298	263	8Ø12	0,23	0,71	2Ø12	2Ø10	5Ø12	1Ø10	4Ø6	5Ø12	6Ø8	Ø10/140	1Ø6	-
	500	100	349	174	8Ø12	0,29	0,91	2Ø12	2Ø10	5Ø12	1Ø10	5Ø6	6Ø12	7Ø8	Ø10/140	1Ø6	2Ø10
	600	100	349	174	8Ø12	0,29	1,07	2Ø12	2Ø10	5Ø12	1Ø10	6Ø6	7Ø12	8Ø8	Ø10/140	1Ø6	2Ø10
	700	100	349	174	8Ø12	0,29	1,23	2Ø12	2Ø10	5Ø12	1Ø10	7Ø6	8Ø10	9Ø8	Ø10/140	1Ø6	3Ø10
	800	100	349	174	8Ø12	0,29	1,39	2Ø12	2Ø10	5Ø12	1Ø10	8Ø6	9Ø10	10Ø8	Ø10/140	1Ø6	3Ø10
230	300	80	235	265	6Ø12	0,23	0,61	2Ø12	2Ø10	5Ø12	1Ø10	4Ø6	5Ø10	6Ø8	Ø10/140	1Ø6	-
	400	100	298	263	6Ø12	0,29	0,73	2Ø12	2Ø10	5Ø12	1Ø10	4Ø6	5Ø12	6Ø8	Ø10/140	1Ø6	-
	500	100	364	182	8Ø12	0,29	0,88	2Ø12	2Ø10	5Ø12	1Ø10	5Ø6	6Ø12	7Ø8	Ø10/140	1Ø6	2Ø10
	600	100	364	182	8Ø12	0,29	1,03	2Ø12	2Ø10	5Ø12	1Ø10	6Ø6	7Ø12	8Ø8	Ø10/140	1Ø6	2Ø10
	700	100	364	182	8Ø12	0,29	1,18	2Ø12	2Ø10	5Ø12	1Ø10	7Ø6	8Ø10	9Ø8	Ø10/140	1Ø6	3Ø10
	800	100	364	182	8Ø12	0,29	1,32	2Ø12	2Ø10	5Ø12	1Ø10	8Ø6	9Ø10	10Ø8	Ø10/140	1Ø6	3Ø10
240	300	84	235	271	6Ø12	0,21	0,58	2Ø12	2Ø10	5Ø12	1Ø10	4Ø6	5Ø10	6Ø8	Ø10/130	1Ø6	-
	400	100	298	263	6Ø12	0,27	0,69	2Ø12	2Ø10	5Ø12	1Ø10	4Ø6	5Ø12	6Ø8	Ø10/130	1Ø6	-
	500	100	379	189	8Ø12	0,29	0,85	2Ø12	2Ø10	5Ø12	1Ø12	5Ø6	6Ø12	7Ø8	Ø10/130	1Ø6	2Ø10
	600	100	379	189	8Ø12	0,29	0,99	2Ø12	2Ø10	5Ø12	1Ø12	6Ø6	7Ø12	8Ø8	Ø10/130	1Ø6	2Ø10
	700	100	379	189	8Ø12	0,29	1,13	2Ø12	2Ø10	5Ø12	1Ø12	7Ø6	8Ø10	9Ø8	Ø10/130	1Ø6	3Ø10
	800	100	379	189	8Ø12	0,29	1,27	2Ø12	2Ø10	5Ø12	1Ø12	8Ø6	9Ø10	10Ø8	Ø10/130	1Ø6	3Ø10

L_1 = distance from the front end of TT-slab

l_b = anchorage length in the supporting area

in case of higher in situ concrete strength classes, lb can be reduced as: $l_b^* = lb \cdot \beta$

concrete	C25/30	C30/37	C35/35
β	0,84	0,75	0,68

in case of increased number of reinforcement Pos.1, lb can be reduced a: $l_b^* = lb \cdot A_{s,req} / A_{s,prov} \geq l_{b,min}$, $n_{P1} \leq 8$

Z_{Ed} = ancorage force for main bending reinforcement of TT-slab to be anchored on $l_{b,ind}$ = 165 mm, to be checked in every single case

PBH corbel

Design table 3

PBH 3, $V_{Ed,erect}$ = 125 kN

slab height h_{pl} [mm]	web height h_w [mm]	support reaction erecting state $V_{Rd,erect}$ [kN]	support reaction final state $V_{Rd,tot}$ [kN]	anchoring force Z_{Ed} [kN]	reinforcement Pos.1	Pos.1 l_b [m]	Pos.1 L_1 [m]	Pos.2	Pos.3	Pos.4	Pos.5	Pos.6	Pos.7	Pos.7a	Pos.8 [mm]	Pos.9	Pos.10
150	300	84	227	320	8Ø12	0,29	0,94	2Ø12	2Ø10	5Ø12	1Ø10	4Ø6	5Ø10	6Ø8	Ø10/210	1Ø6	-
	400	115	259	314	8Ø12	0,29	1,08	2Ø12	2Ø10	5Ø12	1Ø10	4Ø6	5Ø10	6Ø8	Ø10/210	1Ø6	-
	500	125	269	187	8Ø12	0,29	1,35	2Ø12	2Ø10	5Ø12	1Ø10	5Ø6	6Ø10	7Ø8	Ø10/210	1Ø8	2Ø10
	600	125	269	187	8Ø12	0,29	1,63	2Ø12	2Ø10	5Ø12	1Ø10	6Ø6	7Ø10	8Ø8	Ø10/210	1Ø8	2Ø10
	700	125	269	187	8Ø12	0,29	1,90	2Ø12	2Ø10	5Ø12	1Ø10	7Ø6	8Ø10	9Ø8	Ø10/210	1Ø8	3Ø10
	800	125	269	187	8Ø12	0,29	2,17	2Ø12	2Ø10	5Ø12	1Ø10	8Ø6	9Ø10	10Ø8	Ø10/210	1Ø8	3Ø10
160	300	84	235	307	8Ø12	0,28	0,87	2Ø12	2Ø10	5Ø12	1Ø10	4Ø6	5Ø10	6Ø8	Ø10/200	1Ø6	-
	400	116	274	308	8Ø12	0,29	1,01	2Ø12	2Ø10	5Ø12	1Ø10	4Ø6	5Ø10	6Ø8	Ø10/200	1Ø6	-
	500	125	284	180	8Ø12	0,29	1,26	2Ø12	2Ø10	5Ø12	1Ø10	5Ø6	6Ø10	7Ø8	Ø10/200	1Ø8	2Ø10
	600	125	284	180	8Ø12	0,29	1,50	2Ø12	2Ø10	5Ø12	1Ø10	6Ø6	7Ø10	8Ø8	Ø10/200	1Ø8	2Ø10
	700	125	284	180	8Ø12	0,29	1,75	2Ø12	2Ø10	5Ø12	1Ø10	7Ø6	8Ø10	9Ø8	Ø10/200	1Ø8	3Ø10
	800	125	284	180	8Ø12	0,29	2,00	2Ø12	2Ø10	5Ø12	1Ø10	8Ø6	9Ø10	10Ø8	Ø10/200	1Ø8	3Ø10
170	300	84	235	291	8Ø12	0,25	0,82	2Ø12	2Ø10	5Ø12	1Ø10	4Ø6	5Ø10	6Ø8	Ø10/190	1Ø6	-
	400	116	289	300	8Ø12	0,29	0,95	2Ø12	2Ø10	5Ø12	1Ø10	4Ø6	5Ø12	6Ø8	Ø10/190	1Ø6	-
	500	125	299	173	8Ø12	0,29	1,18	2Ø12	2Ø10	5Ø12	1Ø10	5Ø6	6Ø10	7Ø8	Ø10/190	1Ø8	2Ø10
	600	125	299	173	8Ø12	0,29	1,40	2Ø12	2Ø10	5Ø12	1Ø10	6Ø6	7Ø10	8Ø8	Ø10/190	1Ø8	2Ø10
	700	125	299	173	8Ø12	0,29	1,63	2Ø12	2Ø10	5Ø12	1Ø10	7Ø6	8Ø10	9Ø8	Ø10/190	1Ø8	3Ø10
	800	125	299	173	8Ø12	0,29	1,86	2Ø12	2Ø10	5Ø12	1Ø10	8Ø6	9Ø10	10Ø8	Ø10/190	1Ø8	3Ø10
180	300	84	235	278	8Ø12	0,23	0,75	2Ø12	2Ø10	5Ø12	1Ø10	4Ø6	5Ø10	6Ø8	Ø10/180	1Ø6	-
	400	116	298	289	8Ø12	0,28	0,90	2Ø12	2Ø10	5Ø12	1Ø10	4Ø6	6Ø10	7Ø8	Ø10/180	1Ø6	-
	500	125	314	165	8Ø12	0,29	1,11	2Ø12	2Ø10	5Ø12	1Ø10	5Ø6	6Ø10	7Ø8	Ø10/180	1Ø8	2Ø10
	600	125	314	165	8Ø12	0,29	1,31	2Ø12	2Ø10	5Ø12	1Ø10	6Ø6	7Ø10	8Ø8	Ø10/180	1Ø8	2Ø10
	700	125	314	165	8Ø12	0,29	1,52	2Ø12	2Ø10	5Ø12	1Ø10	7Ø6	8Ø10	9Ø8	Ø10/180	1Ø8	3Ø10
	800	125	314	165	8Ø12	0,29	1,73	2Ø12	2Ø10	5Ø12	1Ø10	8Ø6	9Ø10	10Ø8	Ø10/180	1Ø8	3Ø10
190	300	84	235	271	6Ø12	0,29	0,76	2Ø12	2Ø10	5Ø12	1Ø10	4Ø6	5Ø10	6Ø8	Ø10/170	1Ø6	-
	400	116	298	281	8Ø12	0,26	0,83	2Ø12	2Ø10	5Ø12	1Ø10	4Ø6	5Ø12	6Ø8	Ø10/170	1Ø6	-
	500	125	329	164	8Ø12	0,29	1,04	2Ø12	2Ø10	5Ø12	1Ø10	5Ø6	6Ø12	7Ø8	Ø10/170	1Ø8	2Ø10
	600	125	329	164	8Ø12	0,29	1,24	2Ø12	2Ø10	5Ø12	1Ø10	6Ø6	7Ø10	8Ø8	Ø10/170	1Ø8	2Ø10
	700	125	329	164	8Ø12	0,29	1,43	2Ø12	2Ø10	5Ø12	1Ø10	7Ø6	8Ø10	9Ø8	Ø10/170	1Ø8	3Ø10
	800	125	329	164	8Ø12	0,29	1,62	2Ø12	2Ø10	5Ø12	1Ø10	8Ø6	9Ø10	10Ø8	Ø10/170	1Ø8	3Ø10
200	300	84	235	271	8Ø12	0,20	0,66	2Ø12	2Ø10	5Ø12	1Ø10	4Ø6	5Ø10	6Ø8	Ø10/160	1Ø6	-
	400	116	298	281	8Ø12	0,24	0,78	2Ø12	2Ø10	5Ø12	1Ø10	4Ø6	5Ø12	6Ø8	Ø10/160	1Ø6	-
	500	125	344	172	8Ø12	0,29	0,99	2Ø12	2Ø10	5Ø12	1Ø12	5Ø6	6Ø12	7Ø8	Ø10/160	1Ø8	2Ø10
	600	125	344	172	8Ø12	0,29	1,17	2Ø12	2Ø10	5Ø12	1Ø12	6Ø6	7Ø10	8Ø8	Ø10/160	1Ø8	2Ø10
	700	125	344	172	8Ø12	0,29	1,35	2Ø12	2Ø10	5Ø12	1Ø12	7Ø6	8Ø10	9Ø8	Ø10/160	1Ø8	3Ø10
	800	125	344	172	8Ø12	0,29	1,53	2Ø12	2Ø10	5Ø12	1Ø12	8Ø6	9Ø10	10Ø8	Ø10/160	1Ø8	3Ø10
210	300	84	235	271	6Ø12	0,25	0,68	2Ø12	2Ø10	5Ø12	1Ø10	4Ø6	5Ø10	6Ø8	Ø10/150	1Ø6	-
	400	116	298	281	8Ø12	0,23	0,74	2Ø12	2Ø10	5Ø12	1Ø10	4Ø6	5Ø12	6Ø8	Ø10/150	1Ø6	-
	500	125	359	179	8Ø12	0,29	0,95	2Ø12	2Ø10	5Ø12	1Ø12	5Ø6	6Ø12	7Ø8	Ø10/150	1Ø8	2Ø10
	600	125	359	179	8Ø12	0,29	1,12	2Ø12	2Ø10	5Ø12	1Ø12	6Ø6	7Ø12	8Ø8	Ø10/150	1Ø8	2Ø10
	700	125	359	179	8Ø12	0,29	1,29	2Ø12	2Ø10	5Ø12	1Ø12	7Ø6	8Ø10	9Ø8	Ø10/150	1Ø8	3Ø10
	800	125	359	179	8Ø12	0,29	1,46	2Ø12	2Ø10	5Ø12	1Ø12	8Ø6	9Ø10	10Ø8	Ø10/150	1Ø8	3Ø10
220	300	84	235	271	6Ø12	0,24	0,64	2Ø12	2Ø10	5Ø12	1Ø10	4Ø6	5Ø10	6Ø8	Ø10/140	1Ø6	-
	400	116	298	281	6Ø12	0,28	0,75	2Ø12	2Ø10	5Ø12	1Ø10	4Ø6	5Ø12	6Ø8	Ø10/140	1Ø6	-
	500	125	367	183	8Ø12	0,28	0,91	2Ø12	2Ø10	5Ø12	1Ø12	5Ø6	6Ø12	7Ø8	Ø10/140	1Ø8	2Ø10
	600	125	367	183	8Ø12	0,28	1,07	2Ø12	2Ø10	5Ø12	1Ø12	6Ø6	7Ø12	8Ø8	Ø10/140	1Ø8	2Ø10
	700	125	367	183	8Ø12	0,28	1,23	2Ø12	2Ø10	5Ø12	1Ø12	7Ø6	8Ø10	9Ø8	Ø10/140	1Ø8	3Ø10
	800	125	367	183	8Ø12	0,28	1,39	2Ø12	2Ø10	5Ø12	1Ø12	8Ø6	9Ø10	10Ø8	Ø10/140	1Ø8	3Ø10
230	300	84	235	271	6Ø12	0,22	0,61	2Ø12	2Ø10	5Ø12	1Ø10	4Ø6	5Ø10	6Ø8	Ø10/140	1Ø6	-
	400	116	298	281	6Ø12	0,27	0,72	2Ø12	2Ø10	5Ø12	1Ø10	4Ø6	5Ø12	6Ø8	Ø10/140	1Ø6	-
	500	125	367	184	8Ø12	0,27	0,87	2Ø12	2Ø10	5Ø12	1Ø12	5Ø6	6Ø12	7Ø8	Ø10/140	1Ø8	2Ø10
	600	125	367	184	8Ø12	0,27	1,02	2Ø12	2Ø10	5Ø12	1Ø12	6Ø6	7Ø12	8Ø8	Ø10/140	1Ø8	2Ø10
	700	125	367	184	8Ø12	0,27	1,17	2Ø12	2Ø10	5Ø12	1Ø12	7Ø6	8Ø10	9Ø8	Ø10/140	1Ø8	3Ø10
	800	125	367	184	8Ø12	0,27	1,31	2Ø12	2Ø10	5Ø12	1Ø12	8Ø6	9Ø10	10Ø8	Ø10/140	1Ø8	3Ø10
240	300	84	235	271	6Ø12	0,21	0,58	2Ø12	2Ø10	5Ø12	1Ø10	4Ø6	5Ø10	6Ø8	Ø10/130	1Ø6	-
	400	116	298	281	6Ø12	0,25	0,68	2Ø12	2Ø10	5Ø12	1Ø10	4Ø6	5Ø12	6Ø8	Ø10/130	1Ø6	-
	500	125	367	183	8Ø12	0,25	0,83	2Ø12	2Ø10	5Ø12	1Ø12	5Ø6	6Ø12	7Ø8	Ø10/130	1Ø8	2Ø10
	600	125	367	183	8Ø12	0,25	0,97	2Ø12	2Ø10	5Ø12	1Ø12	6Ø6	7Ø12	8Ø8	Ø10/130	1Ø8	2Ø10
	700	125	367	183	8Ø12	0,25	1,11	2Ø12	2Ø10	5Ø12	1Ø12	7Ø6	8Ø10	9Ø8	Ø10/130	1Ø8	3Ø10
	800	125	367	183	8Ø12	0,25	1,25	2Ø12	2Ø10	5Ø12	1Ø12	8Ø6	9Ø10	10Ø8	Ø10/130	1Ø8	3Ø10

L_1 = distance from the front end of TT-slab

l_b = anchorage length in the supporting area

in case of higher in situ concrete strength classes, lb can be reduced as: $l_b^* = lb \cdot \beta$

concrete	C25/30	C30/37	C35/35
β	0,84	0,75	0,68

in case of increased number of reinforcement Pos.1, lb can be reduced a: $l_b^* = lb \cdot A_{s,req} / A_{s,prov} \geq l_{b,min}$, $n_{P1} \leq 8$

Z_{Ed} = ancorage force for main bending reinforcement of TT-slab to be anchored on $l_{b,ind}$ = 165 mm, to be checked in every single case

Design table 4

PBH 4, $V_{Ed,erect}$ = 150 kN

slab height h_{pl} [mm]	web height h_w [mm]	support reaction erecting state $V_{Rd,erect}$ [kN]	support reaction final state $V_{Rd,tot}$ [kN]	anchoring force Z_{Ed} [kN]	reinforcement Pos.1	Pos.1 l_b [m]	Pos.1 L_1 [m]	Pos.2	Pos.3	Pos.4	Pos.5	Pos.6	Pos.7	Pos.7a	Pos.8 [mm]	Pos.9	Pos.10
150	300	92	235	339	8Ø12	0,29	0,94	2Ø12	2Ø10	5Ø12	1Ø10	4Ø6	5Ø10	6Ø8	Ø10/210	1Ø6	-
	400	126	270	333	8Ø12	0,29	1,08	2Ø12	2Ø10	5Ø12	1Ø10	4Ø6	5Ø10	6Ø8	Ø10/210	1Ø8	-
	500	150	294	200	8Ø12	0,29	1,35	2Ø12	2Ø10	5Ø12	1Ø10	5Ø6	6Ø10	7Ø8	Ø10/210	1Ø8	3Ø10
	600	150	294	200	8Ø12	0,29	1,63	2Ø12	2Ø10	5Ø12	1Ø10	6Ø6	7Ø10	8Ø8	Ø10/210	1Ø8	3Ø10
	700	150	294	200	8Ø12	0,29	1,90	2Ø12	2Ø10	5Ø12	1Ø10	7Ø6	8Ø10	9Ø8	Ø10/210	1Ø8	3Ø10
	800	150	294	200	8Ø12	0,29	2,17	2Ø12	2Ø10	5Ø12	1Ø10	8Ø6	9Ø10	10Ø8	Ø10/210	1Ø8	3Ø10
160	300	92	235	321	8Ø12	0,26	0,86	2Ø12	2Ø10	5Ø12	1Ø10	4Ø6	5Ø10	6Ø8	Ø10/200	1Ø6	-
	400	127	286	326	8Ø12	0,29	1,01	2Ø12	2Ø10	5Ø12	1Ø10	4Ø6	5Ø12	6Ø8	Ø10/200	1Ø8	-
	500	150	309	193	8Ø12	0,29	1,26	2Ø12	2Ø10	5Ø12	1Ø10	5Ø6	6Ø10	7Ø8	Ø10/200	1Ø8	3Ø10
	600	150	309	193	8Ø12	0,29	1,50	2Ø12	2Ø10	5Ø12	1Ø10	6Ø6	7Ø10	8Ø8	Ø10/200	1Ø8	3Ø10
	700	150	309	193	8Ø12	0,29	1,75	2Ø12	2Ø10	5Ø12	1Ø10	7Ø6	8Ø10	9Ø8	Ø10/200	1Ø8	3Ø10
	800	150	309	193	8Ø12	0,29	2,00	2Ø12	2Ø10	5Ø12	1Ø10	8Ø6	9Ø10	10Ø8	Ø10/200	1Ø8	3Ø10
170	300	92	235	305	8Ø12	0,24	0,81	2Ø12	2Ø10	5Ø12	1Ø10	4Ø6	5Ø10	6Ø8	Ø10/190	1Ø6	-
	400	127	298	317	8Ø12	0,28	0,95	2Ø12	2Ø10	5Ø12	1Ø10	4Ø6	5Ø12	6Ø8	Ø10/190	1Ø8	-
	500	150	324	185	8Ø12	0,29	1,18	2Ø12	2Ø10	5Ø12	1Ø12	5Ø6	6Ø10	7Ø8	Ø10/190	1Ø8	3Ø10
	600	150	324	185	8Ø12	0,29	1,40	2Ø12	2Ø10	5Ø12	1Ø12	6Ø6	7Ø10	8Ø8	Ø10/190	1Ø8	3Ø10
	700	150	324	185	8Ø12	0,29	1,63	2Ø12	2Ø10	5Ø12	1Ø12	7Ø6	8Ø10	9Ø8	Ø10/190	1Ø8	3Ø10
	800	150	324	185	8Ø12	0,29	1,86	2Ø12	2Ø10	5Ø12	1Ø12	8Ø6	9Ø10	10Ø8	Ø10/190	1Ø8	3Ø10
180	300	92	235	292	8Ø12	0,22	0,74	2Ø12	2Ø10	5Ø12	1Ø10	4Ø6	5Ø10	6Ø8	Ø10/180	1Ø6	-
	400	127	298	301	8Ø12	0,26	0,88	2Ø12	2Ø10	5Ø12	1Ø10	4Ø6	6Ø10	7Ø8	Ø10/180	1Ø8	-
	500	150	339	178	8Ø12	0,29	1,11	2Ø12	2Ø10	5Ø12	1Ø12	5Ø6	6Ø12	7Ø8	Ø10/180	1Ø8	3Ø10
	600	150	339	178	8Ø12	0,29	1,31	2Ø12	2Ø10	5Ø12	1Ø12	6Ø6	7Ø10	8Ø8	Ø10/180	1Ø8	3Ø10
	700	150	339	178	8Ø12	0,29	1,52	2Ø12	2Ø10	5Ø12	1Ø12	7Ø6	8Ø10	9Ø8	Ø10/180	1Ø8	3Ø10
	800	150	339	178	8Ø12	0,29	1,73	2Ø12	2Ø10	5Ø12	1Ø12	8Ø6	9Ø10	10Ø8	Ø10/180	1Ø8	3Ø10
190	300	92	235	286	6Ø12	0,27	0,75	2Ø12	2Ø10	5Ø12	1Ø10	4Ø6	5Ø10	6Ø8	Ø10/170	1Ø6	-
	400	127	298	294	8Ø12	0,24	0,82	2Ø12	2Ø10	5Ø12	1Ø10	4Ø6	5Ø12	6Ø8	Ø10/170	1Ø8	-
	500	150	342	171	8Ø12	0,27	1,03	2Ø12	2Ø10	5Ø12	1Ø12	5Ø6	6Ø12	7Ø8	Ø10/170	1Ø8	3Ø10
	600	150	342	171	8Ø12	0,27	1,23	2Ø12	2Ø10	5Ø12	1Ø12	6Ø6	7Ø10	8Ø8	Ø10/170	1Ø8	3Ø10
	700	150	342	171	8Ø12	0,27	1,42	2Ø12	2Ø10	5Ø12	1Ø12	7Ø6	8Ø10	9Ø8	Ø10/170	1Ø8	3Ø10
	800	150	342	171	8Ø12	0,27	1,61	2Ø12	2Ø10	5Ø12	1Ø12	8Ø6	9Ø10	10Ø8	Ø10/170	1Ø8	3Ø10
200	300	92	235	286	8Ø12	0,19	0,65	2Ø12	2Ø10	5Ø12	1Ø10	4Ø6	5Ø10	6Ø8	Ø10/160	1Ø6	-
	400	127	298	294	8Ø12	0,23	0,77	2Ø12	2Ø10	5Ø12	1Ø10	4Ø6	5Ø12	6Ø8	Ø10/160	1Ø8	-
	500	150	342	171	8Ø12	0,25	0,97	2Ø12	2Ø10	5Ø12	1Ø12	5Ø6	6Ø12	7Ø8	Ø10/160	1Ø8	3Ø10
	600	150	342	171	8Ø12	0,25	1,15	2Ø12	2Ø10	5Ø12	1Ø12	6Ø6	7Ø10	8Ø8	Ø10/160	1Ø8	3Ø10
	700	150	342	171	8Ø12	0,25	1,33	2Ø12	2Ø10	5Ø12	1Ø12	7Ø6	8Ø10	9Ø8	Ø10/160	1Ø8	3Ø10
	800	150	342	171	8Ø12	0,25	1,51	2Ø12	2Ø10	5Ø12	1Ø12	8Ø6	9Ø10	10Ø8	Ø10/160	1Ø8	3Ø10
210	300	92	235	286	6Ø12	0,24	0,67	2Ø12	2Ø10	5Ø12	1Ø10	4Ø6	5Ø10	6Ø8	Ø10/150	1Ø6	-
	400	127	298	294	6Ø12	0,28	0,78	2Ø12	2Ø10	5Ø12	1Ø10	4Ø6	5Ø12	6Ø8	Ø10/150	1Ø8	-
	500	150	342	171	8Ø12	0,24	0,92	2Ø12	2Ø10	5Ø12	1Ø12	5Ø6	6Ø12	7Ø8	Ø10/150	1Ø8	3Ø10
	600	150	342	171	8Ø12	0,24	1,09	2Ø12	2Ø10	5Ø12	1Ø12	6Ø6	7Ø12	8Ø8	Ø10/150	1Ø8	3Ø10
	700	150	342	171	8Ø12	0,24	1,26	2Ø12	2Ø10	5Ø12	1Ø12	7Ø6	8Ø10	9Ø8	Ø10/150	1Ø8	3Ø10
	800	150	342	171	8Ø12	0,24	1,43	2Ø12	2Ø10	5Ø12	1Ø12	8Ø6	9Ø10	10Ø8	Ø10/150	1Ø8	3Ø10
220	300	92	235	286	6Ø12	0,22	0,63	2Ø12	2Ø10	5Ø12	1Ø10	4Ø6	5Ø10	6Ø8	Ø10/140	1Ø6	-
	400	127	298	294	6Ø12	0,27	0,74	2Ø12	2Ø10	5Ø12	1Ø10	4Ø6	5Ø12	6Ø8	Ø10/140	1Ø8	-
	500	150	342	171	8Ø12	0,22	0,87	2Ø12	2Ø10	5Ø12	1Ø12	5Ø6	6Ø12	7Ø8	Ø10/140	1Ø8	3Ø10
	600	150	342	171	8Ø12	0,22	1,03	2Ø12	2Ø10	5Ø12	1Ø12	6Ø6	7Ø12	8Ø8	Ø10/140	1Ø8	3Ø10
	700	150	342	171	8Ø12	0,22	1,19	2Ø12	2Ø10	5Ø12	1Ø12	7Ø6	8Ø10	9Ø8	Ø10/140	1Ø8	3Ø10
	800	150	342	171	8Ø12	0,22	1,35	2Ø12	2Ø10	5Ø12	1Ø12	8Ø6	9Ø10	10Ø8	Ø10/140	1Ø8	3Ø10
230	300	92	235	286	6Ø12	0,21	0,60	2Ø12	2Ø10	5Ø12	1Ø10	4Ø6	5Ø10	6Ø8	Ø10/140	1Ø6	-
	400	127	298	294	6Ø12	0,25	0,71	2Ø12	2Ø10	5Ø12	1Ø10	4Ø6	5Ø12	6Ø8	Ø10/140	1Ø8	-
	500	150	342	171	6Ø12	0,28	0,88	2Ø12	2Ø10	5Ø12	1Ø12	5Ø6	6Ø12	7Ø8	Ø10/140	1Ø8	3Ø10
	600	150	342	171	6Ø12	0,28	1,03	2Ø12	2Ø10	5Ø12	1Ø12	6Ø6	7Ø12	8Ø8	Ø10/140	1Ø8	3Ø10
	700	150	342	171	6Ø12	0,28	1,18	2Ø12	2Ø10	5Ø12	1Ø12	7Ø6	8Ø10	9Ø8	Ø10/140	1Ø8	3Ø10
	800	150	342	171	6Ø12	0,28	1,32	2Ø12	2Ø10	5Ø12	1Ø12	8Ø6	9Ø10	10Ø8	Ø10/140	1Ø8	3Ø10
240	300	92	235	286	6Ø12	0,20	0,57	2Ø12	2Ø10	5Ø12	1Ø10	4Ø6	5Ø10	6Ø8	Ø10/130	1Ø6	-
	400	127	298	294	6Ø12	0,24	0,67	2Ø12	2Ø10	5Ø12	1Ø10	4Ø6	5Ø12	6Ø8	Ø10/130	1Ø8	-
	500	150	342	171	6Ø12	0,27	0,84	2Ø12	2Ø10	5Ø12	1Ø12	5Ø6	6Ø12	7Ø8	Ø10/130	1Ø8	3Ø10
	600	150	342	171	6Ø12	0,27	0,98	2Ø12	2Ø10	5Ø12	1Ø12	6Ø6	7Ø12	8Ø8	Ø10/130	1Ø8	3Ø10
	700	150	342	171	6Ø12	0,27	1,12	2Ø12	2Ø10	5Ø12	1Ø12	7Ø6	8Ø10	9Ø8	Ø10/130	1Ø8	3Ø10
	800	150	342	171	6Ø12	0,27	1,26	2Ø12	2Ø10	5Ø12	1Ø12	8Ø6	9Ø10	10Ø8	Ø10/130	1Ø8	3Ø10

L_1 = distance from the front end of TT-slab

l_b = anchorage length in the supporting area

in case of higher in situ concrete strength classes, lb can be reduced as: $l_b^* = lb \cdot \beta$

concrete	C25/30	C30/37	C35/35
β	0,84	0,75	0,68

in case of increased number of reinforcement Pos.1, lb can be reduced a: $l_b^* = lb \cdot A_{s,req} / A_{s,prov} \geq l_{b,min}$, $n_{P1} \leq 8$

Z_{Ed} = ancorage force for main bending reinforcement of TT-slab to be anchored on $l_{b,ind}$ = 165 mm, to be checked in every single case

Peikko Group • www.peikko.com