peikko®

LIFTING SYSTEMS
RR, RRPr, PLA, PNLF

CERTIFIED inspecta ORGANIZATION
ISO 9001
ISO 14001

Replaces the brochure 11/2006 • 3/2007

Benefits of Peikko lifting systems

RR

- Wide model range
- Is installed to the surface of the mould, the mould remains solid

RRPr

- Fully stainless - no rust leaks over the years
- The part doesn't need to be removed or cut off - the working safety improves
- The part is still functional after lifting - it acts as transversal anchor for balcony slab

PLA (picture above)

- Wide model range
- Fits easily in the mesh
- The threaded coupler has solid bottom - no rust leaks

PNLF

- Available in many sizes
- Fully stainless

peikko®

CONCRETE CONNECTIONS

Peikko benefits

- reliable: passed demanding test program
- competetive price and delivery time
- economical and easy to use in designing, manufacturing and installation of the elements

CONTENTS

1. DESCRIPTIONS OF THE SYSTEMS 4

2. DIMENSIONS AND MATERIALS 4

3. MANUFACTURING 4

3.1 Manufacturing method 4

3.2 Quality control 4

4. PERMISSIBLE LOADS 4

5. APPLICATION 5

5.1 Limitations for application 5

5.2 Design principles 5

5.2.1 Dimensioning 5

5.2.2 Reinforcement and requirements of the concrete structure 5

5.2.3 Additional load caused by indirect lifting 5

6. INSTALLATION 5

7. PRODUCTS 6

7.1 RR, RRK and RRH lifting lugs 6

7.1.1 Materials, dimensions and coating of lifting lugs 6

7.1.2 Permissible loads and minimum edge distances of lifting lugs 7

7.1.3 Reinforcement of the concrete structure 7

7.1.4 Installation and supplies for lifting lugs 8

7.1.5 Lifting 8

7.2 RRPr column's lifting part 8

7.2.1 Materials, dimensions and coating of RRPr 8

7.2.2 Permissible loads and minimum edge distances of RRPr 9

7.2.3 Reinforcement of the concrete structure 9

7.2.4 Installation and supplies fo RRPr 9

7.2.5 Lifting 10

7.3 PLA lifting anchors 10

7.3.1 Materials, dimensions and coating of PLA 10

7.3.2 Permissible loads and minimum edge distances of PLA 10

7.3.3 Reinforcement of the concrete structure 11

7.3.5 Lifting 12

7.4 PNLF lifting anchor 13

7.4.1 Materials, dimensions and coating of PNLF 13

7.4.2 Permissible loads and minimum edge distances of PNLF 13

7.4.3 Reinforcement of the concrete structure 13

7.4.4 Installation and supplies for PNLF 14

7.4.5 Lifting 14

LIFTING SYSTEMS

1. DESCRIPTIONS OF THE SYSTEMS

Peikko® lifting parts are made for lifting concrete elements. The parts are installed inside the cast. The parts have anchors that fasten them to the concrete. The weight of the element is carried trough these anchorages to the lifting part.

When lifting with RR, RRPr and PLA, a separate lifting device is connected to the lifting part. The devices can be reused. In a case of PNLF, lifting link is attached directly to the lifting anchor.

Best suited lifting parts for different element:

Slabs:
- PLA lifing anchors
- RR and RRK lifting lugs (2)

Walls, beams:
- RRH lifting lugs

Sandwich –wall elements:
- PNLF lifting anchors (3)

Floor height balcony columns:
- RRPr column's lifting parts (1)

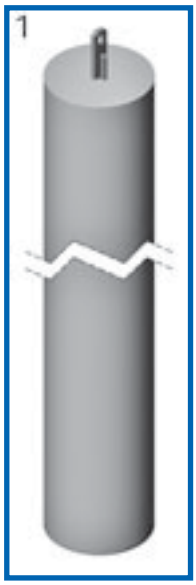

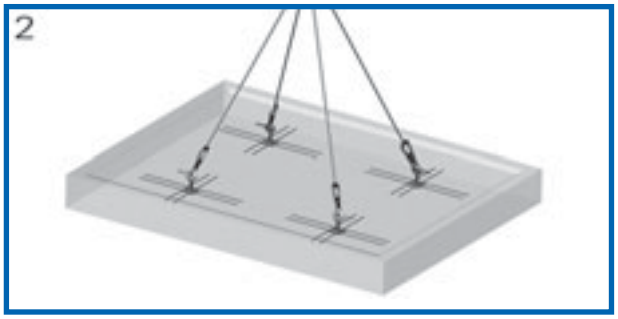

2. DIMENSIONS AND MATERIALS

Each parts' dimensions and materials are described in section 7.

3. MANUFAC-TURING

3.1 Manufacturing method

Plates/ Flat bar	Mechanical cutting
Angle bars	Mechanical cutting
Ribbed bars	Mechanical cutting
Tubes	Mechanical cutting and bending
Threaded coupler	Drilling and threading
Welding	MAG by hand or with a robot
Welding class	C (SFS-EN 25817)

3.2 Quality control

The quality control involved in producing the steel parts conforms to the requirements set by the Finnish Code of Building Regulations. Peikko Finland Oy is under the Inspecta Certification for quality control. Certified product declarations confirmed by the Concrete Association of Finland are in section 7.

Products are marked with the mark of Inspecta, the emblem of Peikko Group, the type of the product and year and a week of manufacturing.

4. PERMISSIBLE LOADS

The permissible loads of the products are according to the Finnish Code of Building Regulations.

Permissible capacities for one anchor, edge distances and additional reinforcements are described in section 7.

Load and the amount of needed anchors depends on lifting means and angles used according to general principles. Also the suction caused by the mould has to be taken into consideration.

5. APPLICATION

5.1 Limitations for application

RR, RRK and RRH lifting lugs and RRPr column's lifting parts can be lifted only with lifting device intented for these parts.

PLA lifting anchors can be lifted only with lifting device made for PLA parts.

5.2 Design principles

5.2.1 Dimensioning

The values used in dimensioning calculations are breaking strengths of the materials. Breaking strength is used for steel and nominal strength for concrete. The permissible loads are theoretical capacities divided by safety factor of 4.

Capacities are calculated according to the Finnish Code of Building Regulations.

5.2.2 Reinforcement and requirements of the concrete structure

Minimum concrete strengths and edge distances and reinforcement requirements for concrete structure are presented in section 7. Lifting anchors have to be positioned inside edge reinforcements. The concrete cover thickness beneath the anchor has to be according to local building codes.

5.2.3 Additional load caused by indirect lifting

Using lifting chain causes indirect pull that increases the stress to the lifting part. The increased load has to be taken in consideration. Weight distributed for one anchor has to be multiplied according to table 1.

Example:
A slab weigths G = 4000 kg (40 kN) and it has two lifting anchors. Lifting angle is 30° (spread angle 60°).

- Four-point lift without jib crane, so that two anchors can be counted as functional.
  40 kN / 2 = 20 kN / anchor
- According to table 1, load factor for anchor is 1.16
- The load for the anchor in indirect lift
  20 kN x 1.16 = 23.2 kN

Table 1. The factors for additional stress caused by indirect lifting

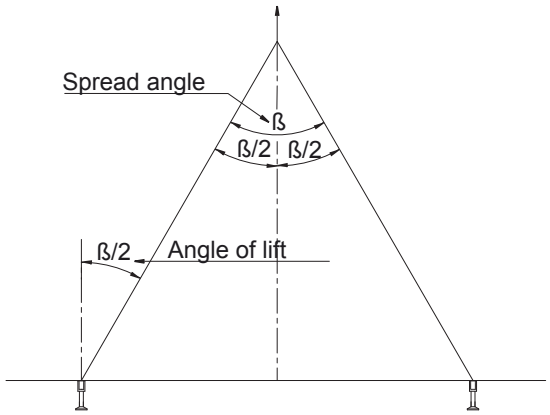

Spread angle ß	Lifting angle ß/2	z
90°	45°	1.41
60°	30°	1.16
45°	22.5°	1.08
30°	15°	1.04
0°	0°	1.00

6. INSTALLATION

Installation of the parts is described in section 7.

7. PRODUCTS

7.1 RR, RRK and RRH lifting lugs

RR is a lifting part for precast slabs. RRK is also for slabs but on the edge. RRH is for walls and beams.

RR and RRK lifting lugs have certified product declarations confirmed by the Concrete Association of Finland.

7.1.1 Materials, dimensions and coating of lifting lugs

Materials and standards:

Angle bars	S235JR	EN 10025
	1.4301, AISI 304	EN 10088
Plates	S355J0	EN 10025
Flat bars	S355J0	EN 10025
Ribbed bars	A500HW	SFS 1215
	B600KX	SFS 1259

Lifting lugs RR, RRK and RRH are painted and RR rton and RRK rton are stainless steel.

Lifting lugs shorter than listed in table 2 cannot be used.

Table 2.
Dimensions [mm] and weights [kg] of RR lifting lugs

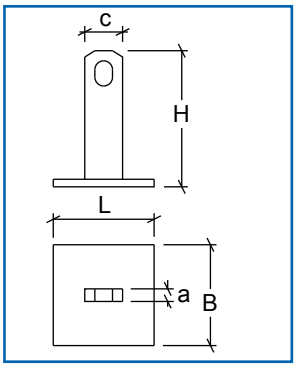

	RR 2	RR 4	RR 2/53	RR 4/68
L	80	100	80	100
B	80	100	80	100
H	108	117	53	68
a	10	15	10	15
c	30	40	30	40
weight	0.5	1.1	0.4	0.9

Table 3.
Dimensions [mm] and weights [kg] of RRK lifting lugs

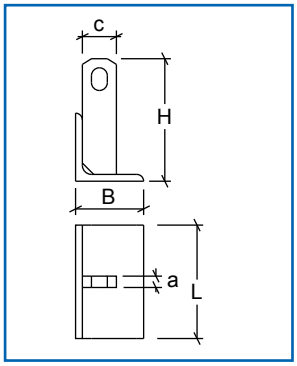

	RRK 2	RRK 4
L	100	150
H	108	140
a	10	15
c	30	40
B (angle)	60x60x6	80x80x8
weight	0.8	2.0

Table 4.
Dimensions [mm] and weights [kg] of RRH lifting lugs

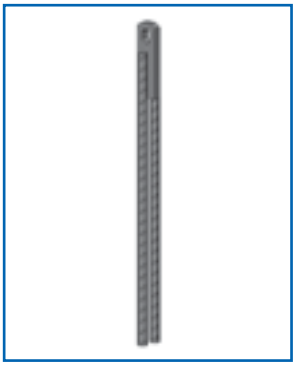

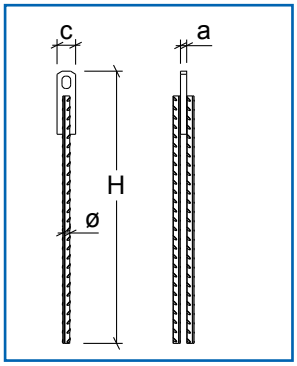

	RRH 2	RRH 4
H	440	550
a	10	15
c	30	40
Ø	10	16
weight	0.8	2.1

7.1.2 Permissible loads and minimum edge distances of lifting lugs

Table 5. Permissible loads of lifting lugs [kN]

	concrete strenght			C[1]
	K20	K30	K40	
RR 2	17.6	17.6	17.6	150
RR 4	24.1	31.6	37.6	160
RR 2/53	7.6	10.0	12.1	150
RR 4/68	11.9	15.5	18.8	160
RRK 2	15.5	17.6	17.6	25
RRK 4	29.3	37.6	37.6	25
RRH 2	-	17.6	-	150[2]
RRH 4	-	37.6	-	160[2]

[1] C is the minimum distance from lifting part's edge [mm].

[2] Lifting lug RRH should not be used with small edge distances if indirect pull towards element edge occurs during lift.

All concrete structures have to be reinforced according to section 7.1.3.

7.1.3 Reinforcement of the concrete structure

Table 6. Reinforcement of the concrete structure (lifting lugs) (A500HW)

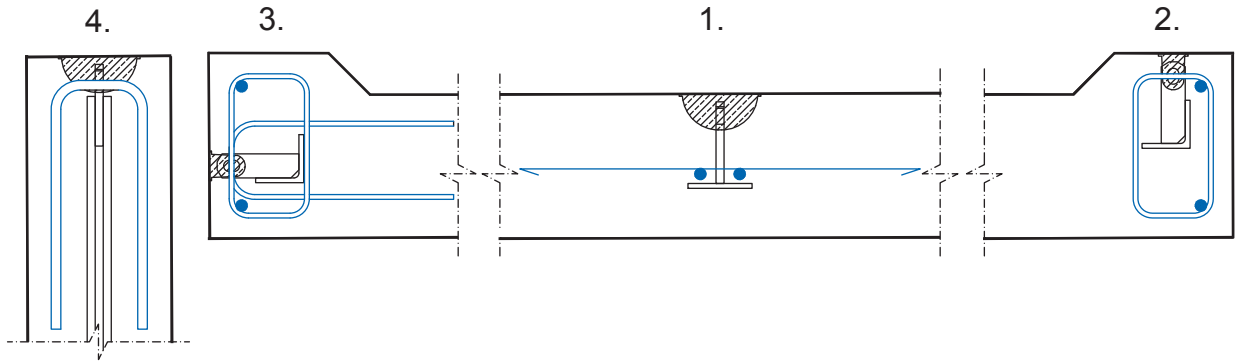

		reinforcement	stirrups	U-stirrups
1.	RR 2	4 Ø 8 L=650	-	-
	RR 4	4 Ø 10 L=800	-	-
2.	RRK 2	-	2 Ø 8	-
	RRK 4	-	2 Ø 10	-
3.	RRK 2	-	2 Ø 8	2 Ø 8
	RRK 4	-	2 Ø 10	2 Ø 10
4.	RRH 2	-	-	2 Ø 8
	RRH4	-	-	2 Ø 10

This extra reinforcement is unnecessary if existent reinforcements fill the needs for lugs' reinforcements.

7.1.4 Installation and supplies for lifting lugs

Lifting lugs are installed using slot mould, which provides the right anchoring depth. The fastening is done either by through mould or by nails.

Also the RRH lifting lug has to be installed using slot mould.

Figure 1. Installation of the lifting lug.

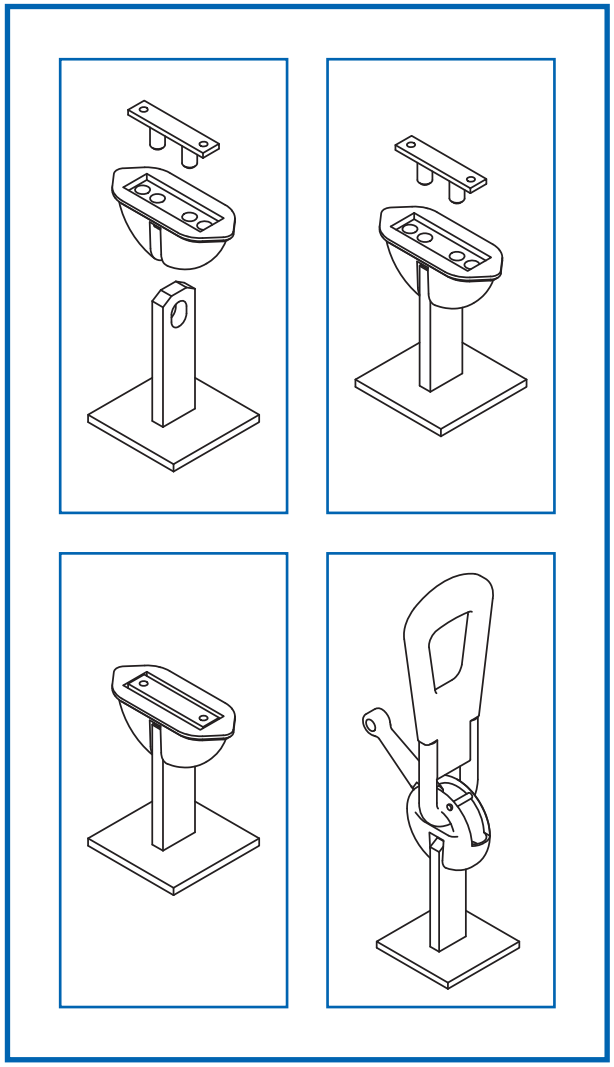

During installation, notice that:

- concrete compaction around the lug is done properly
- the lug is placed according plans
- the reinforcement is done according to plans

The hole must be protected from ice and snow.

,

Table 7. Supplies for lifting lugs.

lifting device	slot mould (rubber)	installation plate for rubber slot mould

7.1.5 Lifting

Lifting should be done with lifting device for lifting lugs.

7.2 RRPr column's lifting part

RRPr is stainless steel part for lifting columns. It is specially for floor height's balcony columns.

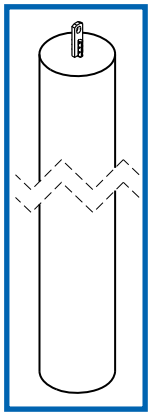

RRPr is used for lifting up and placing smaller columns. The part is left to the column after installation. It acts transversal anchor for balcony slab.

A Ø100 mm hole is needed for balcony slab.

RRPr column's lifting part has certified product declaration confirmed by the Concrete Association of Finland.

Figure 2. Column's lifting part RRPr on a top of column

7.2.1 Materials, dimensions and coating of RRPr

Materials and standards:

Flat bar	
1.4301/ AISI 304	EN 10088
Ribbed bars	
B600KX/ 1.4301	SFS 1259/ EN 10088

The part is fully stainless, so it doesn't have any finishing.

Table 8. Dimensions [mm] and weights [kg] of RRPr.

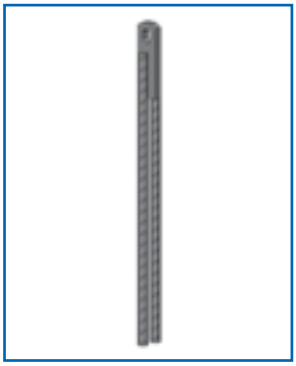

	RRPr 2	RRPr 4
L	440	550
b	30	40
t	10	15
Ø	11	16
weight	1.0	2.4

7.2.2 Permissible loads and minimum edge distances of RRPr

Table 9. Permissible loads of RRPr [kN].

	Concrete strength K30	C[1]
RRPr 2	3.5 kN max column weight 350 kg	90
RRPr 4	10.0 kN max column weight 1000kg	90

[1] C is the minimum edge distance to the part [mm].

All concrete structures have to be reinforced according to section 7.2.3.

Permisible lifting angles are 0-90°. Capacities in table 9 are valid for these lifting angles.

7.2.3 Reinforcement of the concrete structure

Figure 3. Needed column reinforcement for both RRPr 2 and RRPr 4 (TW=A500HW).

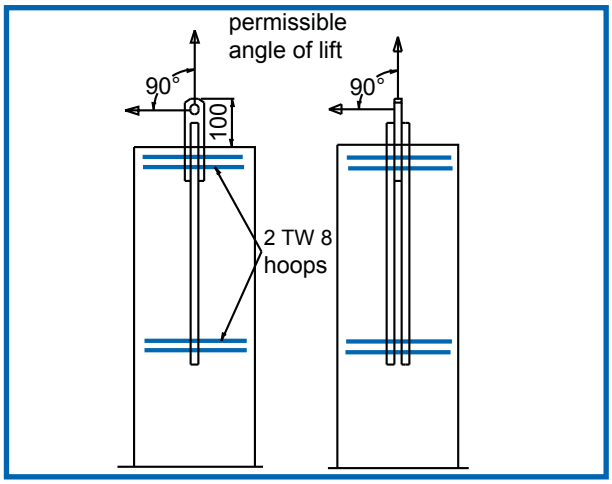

7.2.4 Installation and supplies fo RRPr

The lifting part is installed to the upper end of column so that the part's offset from the surface is 100 mm. The part has markings for installation depth. The part has to be installed in to the centre of the column cross section.

Figure 4. Connection between column and balcony slab. The lifting part remains in the structure.

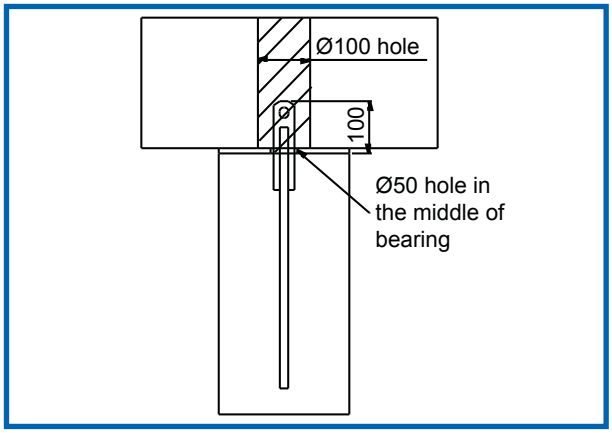

Check before column grouting that:
- the part is in the centre of the column
- the part has 100 mm offset from the column surface
- the part is vertically aligned with the column
- needed reinforcements are made

Check before lifting the column that:
- the part has 100 mm offset from the column surface
- there is right type of lifting device for the lifting
- the column weights less than what is part's capacity

7.2.5 Lifting

Lifting should be done with lifting device for RR parts. Permissible lifting angles are 0-90°.

Figure 5. Lifting of a column.

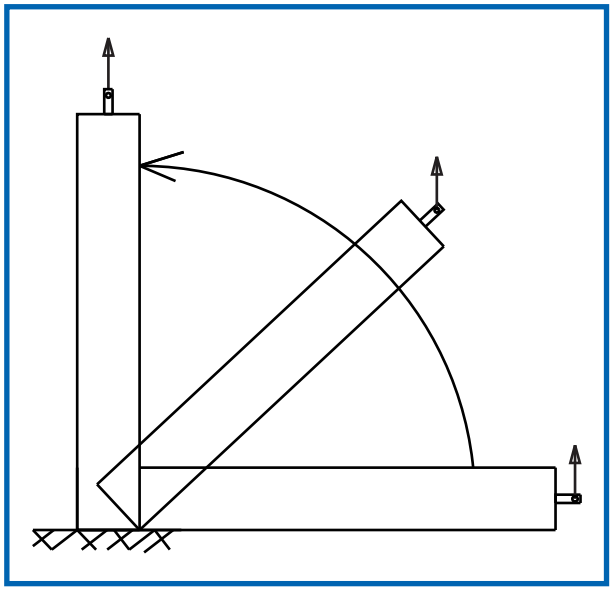

7.3 PLA lifting anchors

PLA lifting anchors are lifting parts for lifting balcony slabs.

After installing the element the lifting anchor needs no mortar filling. It can be capped with plastic cap.

PLA lifting anchor has certified product declaration confirmed by the Concrete Association of Finland.

7.3.1 Materials, dimensions and coating of PLA

Materials:
Threaded coupler
1.4301/ 1.4305 EN 10088
Anchor
A500HW/ Bst500S SFS 1215/ DIN 488

The coupler in PLA is stainless steel, so it doesn't need any coatings.

Table 10. Dimensions [mm] and weights [kg] of PLA.

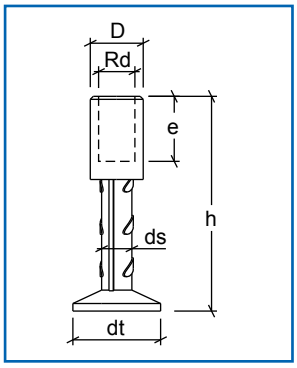

	PLA 20	PLA 24	PLA 30	PLA 36
D	30	35	40	50
Rd	20	24	30	36
ds	20	20	25	32
dt	58	58	72	96
e	35	40	56	68
h	140	150	200	250
weight	0.3	0.4	0.6	1.3

7.3.2 Permissible loads and minimum edge distances of PLA

The concrete strength of the slab must be at least K20. The lifting anchors have to be placed inside edge reinforcement.
A concrete cover beneath the anchor has to be done according to local building codes.

Table 11. Permissible loads for concrete strenght K20 [kN] and minimum installation distances [mm].
h = height of lifting anchor.

	PLA 20	PLA 24	PLA 30	PLA 36
Lifting angle 0°-45°	20	25	40	63
Lifting angle 90°	10	12.5	20	31.5
Edge distance (1,5xh)	210	225	300	375
Centre distance (c/c)	420	450	600	750
Element thickness	160	170	220	270

7.3.3 Reinforcement of the concrete structure

Table 12a. The required reinforcement for indirect lifting B600KX (A500HW) [mm]

Lifting angle > 25°

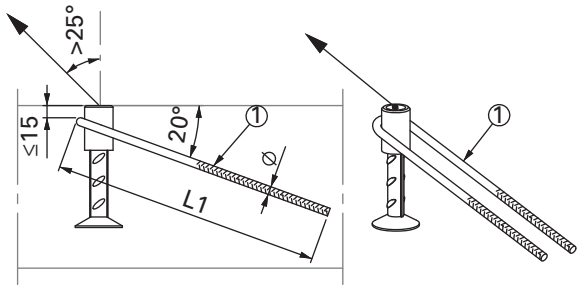

Type	PLA20	PLA24	PLA30	PLA36
U-stirrup 1	Ø7 (Ø8)	Ø9 (Ø10)	Ø11 (Ø12)	Ø16 (Ø16)
L1	375	375	475	500

Table 12b. The required reinforcement when lifted from the side B600KX (A500HW) [mm]

Lifting from the side

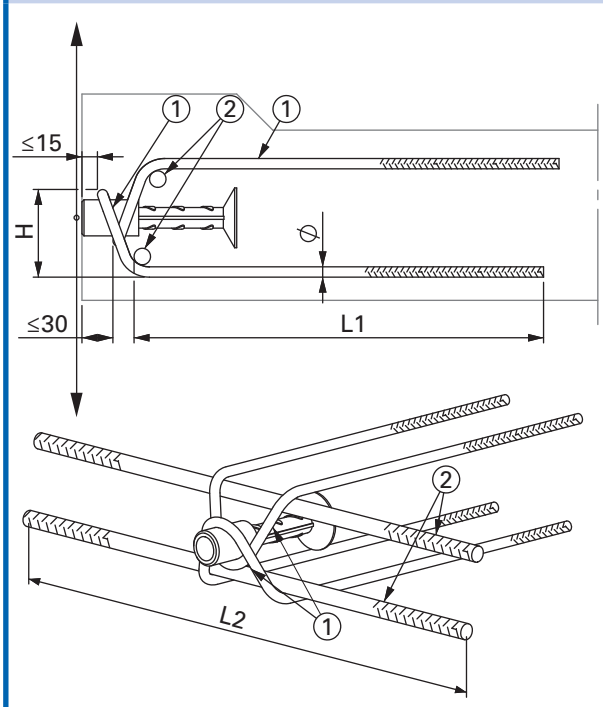

Type	PLA20	PLA24	PLA30	PLA36
U-stirrup 1	Ø7 (Ø8)	Ø9 (Ø10)	Ø11 (Ø12)	Ø16 (Ø16)
L1 / H	300/65	300/75	400/90	500/120
Rebar 2	Ø11-500	Ø16-600	Ø16-600	Ø16-600

The element must be reinforced.

If the element is lifted from the top surface of the element with lifting angle greater than 25°, from the side of the element, or if the anchor has smaller edge distance than given in table 11, the anchor must be reinforced according to table 12.

If the anchor is installed in to the edge of the element, the element has to have minimum reinforcement mesh of B600KX #5-150 on both surfaces and U-stirrups Ø 7 on the both sides of the anchor. The anchor must also be reinforced according to table 12.

Table 12c. The required reinforcement when the edge distance is small B600KX (A500HW) [mm]

If the edge distance is less than 1.5 x h (Table 11)

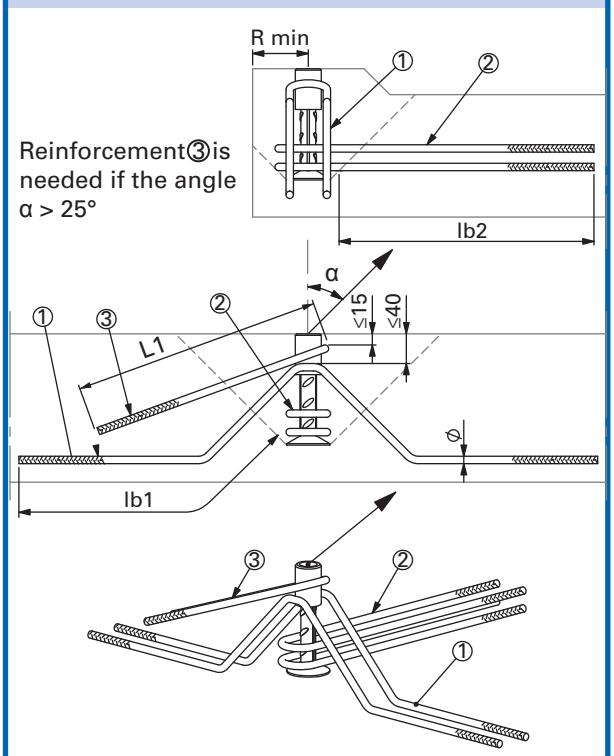

Type	PLA20	PLA24	PLA30	PLA36
Stirrup 1	2Ø7 (2Ø8)	2Ø7 (2Ø8)	2Ø9 (2Ø10)	4Ø9 (4Ø10)
lb1	300	300	400	400
U-stirrup 2	1Ø7 (1Ø8)	2Ø7 (2Ø8)	2Ø7 (2Ø8)	2Ø9 (2Ø10)
lb 2	300	300	300	400
U-stirrup 3	Ø7 (Ø8)	Ø9 (Ø10)	Ø11 (Ø12)	Ø16 (Ø16)
L1	375	375	475	500
R min	65	75	95	115

7.3.4 Installation and supplies for PLA

Lifting anchor can be attached to the mould with separate retaining cap or with a bolt trough the mould. Retaining caps are available for moulds made of both wood and steel. When lifting from the edge of the element, the anchor must be connected directly to the mould surface.

During installation, it has to be noticed that:

- the type of the anchor is chosen according to the plan
- the anchor is properly fastened to the intended position, and it is perpendicularry aligned to the mould.
- when the anchor is installed to the edge of the element, it must be installed up to the surface
- reinforcements are made according to plans
- the compaction of the concrete is done properly around the anchor
- cement paste cannot get in to the thread

7.3.5 Lifting

The lifting should be done using lifting loop or lifting device.

When using the lifting loop, maximum lifting angle is 45°.

Lifting devices must be tightened all the way down.

Lifting device has to be used if element is lifted or turned from the edge.

After lifting, the anchor hole can be filled with frost resistant concrete. The hole can also be capped with plastic cap.

When lifting the element, it hast to be noticed that:

- the thread is clean from cement paste, snow, ice etc.
- the lifting device or loop is undamaged and matches the anchor
- the device is tightened all the way down
- when lifting or turning the element, a swivel lifting device with must be used

Sealing cap with thread	
Threaded lifting loop	*Swivel lifting device*
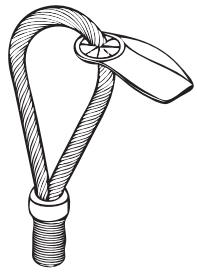	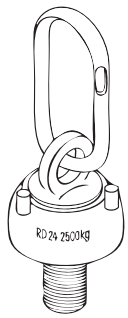

Figure 6. PLA lifting anchor in four-point lift.

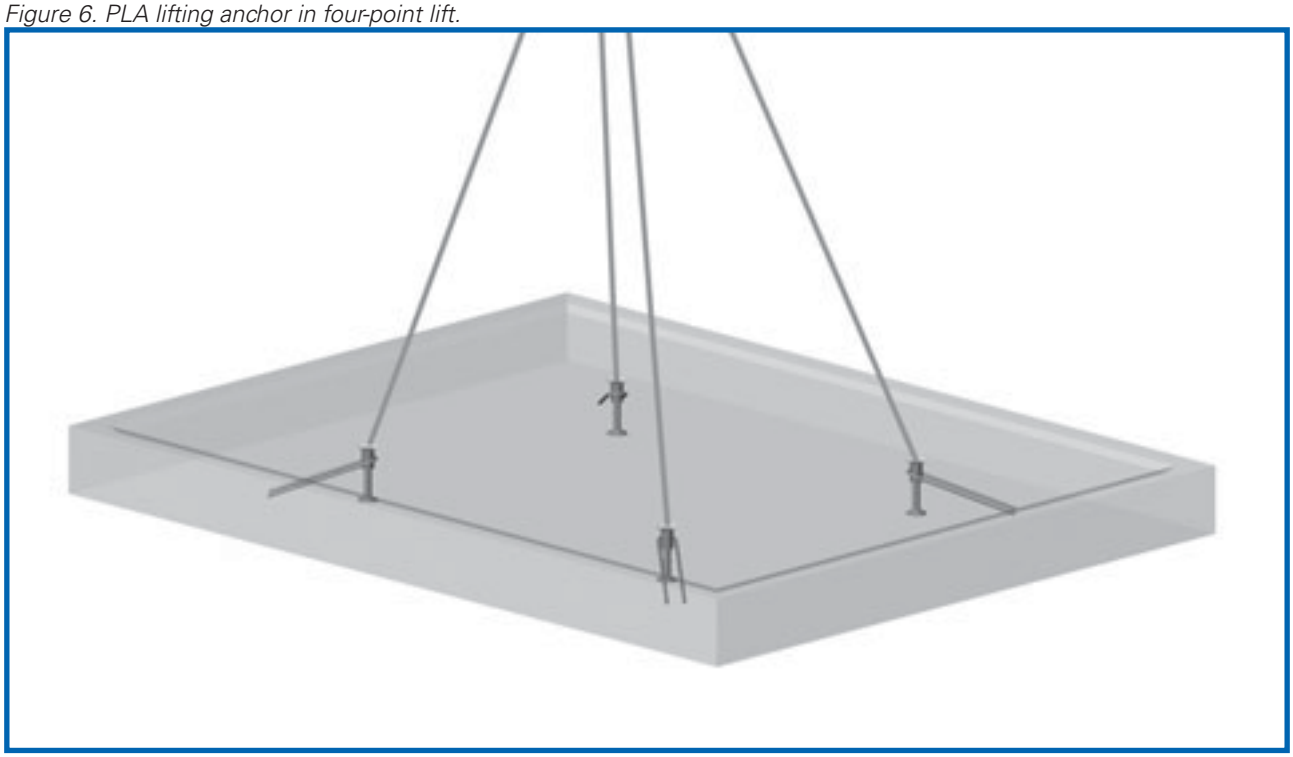

7.4 PNLF lifting anchor

PNLF lifting anchor is made of stainless steel. It is particulary for lifting sandwich elements.

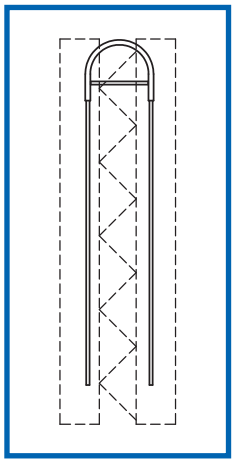

Figure 7. Lifting anchor in sandwitch element.

7.4.1 Materials, dimensions and coating of PNLF

Materials:

Ribbed bars	B600KX	SFS 1259
Tube	1.4301, AISI 304	EN 10088

Table 13. Dimensions [mm] and weights [kg] of PNLF.

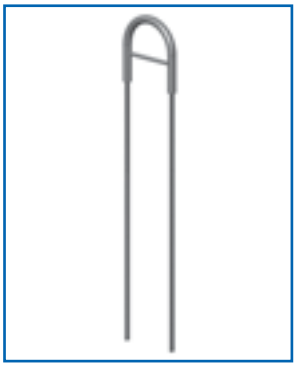

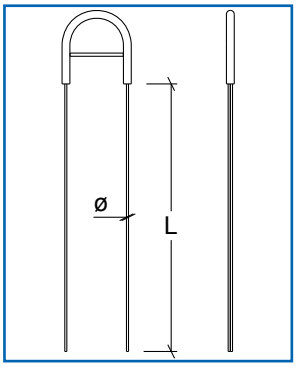

	L	Ø	weight
PNL F1	600	1 Ø 7	1.0
PNL F2	770	1 Ø 9	1.5
PNL F3	940	1 Ø 11	2.3
PNL F4	920	2 Ø 9	3.2
PNL F5	1120	2 Ø 11	5.3
PNL F6	1350	3 Ø 11	8.7

7.4.2 Permissible loads and minimum edge distances of PNLF

Permissible load for one lifting anchor is presented in tables 14 and 15. Permissible loads are valid when the anchor is aligned perpendicular to the oblique pull.

Table 14. Permissible load in direct lift for one PNLF anchor [kN]. Concrete strenght K15.

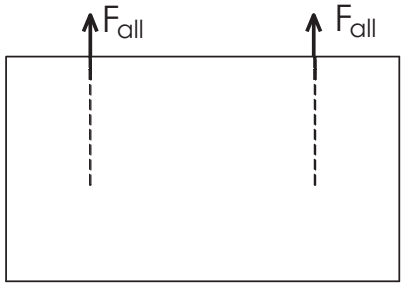

	PNL F1	PNL F2	PNL F3	PNL F4	PNL F5	PNL F6
F_{all}	11.7	19.3	28.8	32.8	48.2	72.0

Table 15. Maximum weight [tonns] of the element when using two anchors and different spread angles. Concrete grade K15.

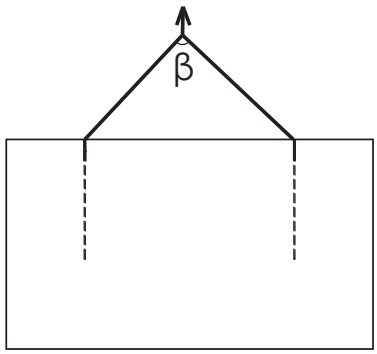

	Spread angle ß			
	45°	60°	90°	120°
PNL F1	2.17	2.02	1.66	1.17
PNL F2	3.57	3.33	2.74	1.93
PNL F3	5.33	4.97	4.09	2.88
PNL F4	6.07	5.66	4.65	3.28
PNL F5	8.9	8.31	6.84	4.82
PNL F6	13.3	12.41	10.21	7.20

Example how to choose anchor:

- element 5t
- spread angle max 60°
- lifting is done using two anchors

Load: PNL F4 5.66 > 5, so PNL F4 is chosen.

7.4.3 Reinforcement of the concrete structure

The element must be reinforced.

7.4.4 Installation and supplies for PNLF

The anchor is installed so that one grip is in the inner panel and the other in outer panel. A concrete cover for the anchor has to be done according to local building codes. It is not allowed to weld anything to the anchor, or heat it up.

7.4.5 Lifting

Lifting anchors have to be aligned perpendicular to oblique pull, so that permissible loads remain valid.

Figure 8. PNLF lifting anchor used in sandwitch element

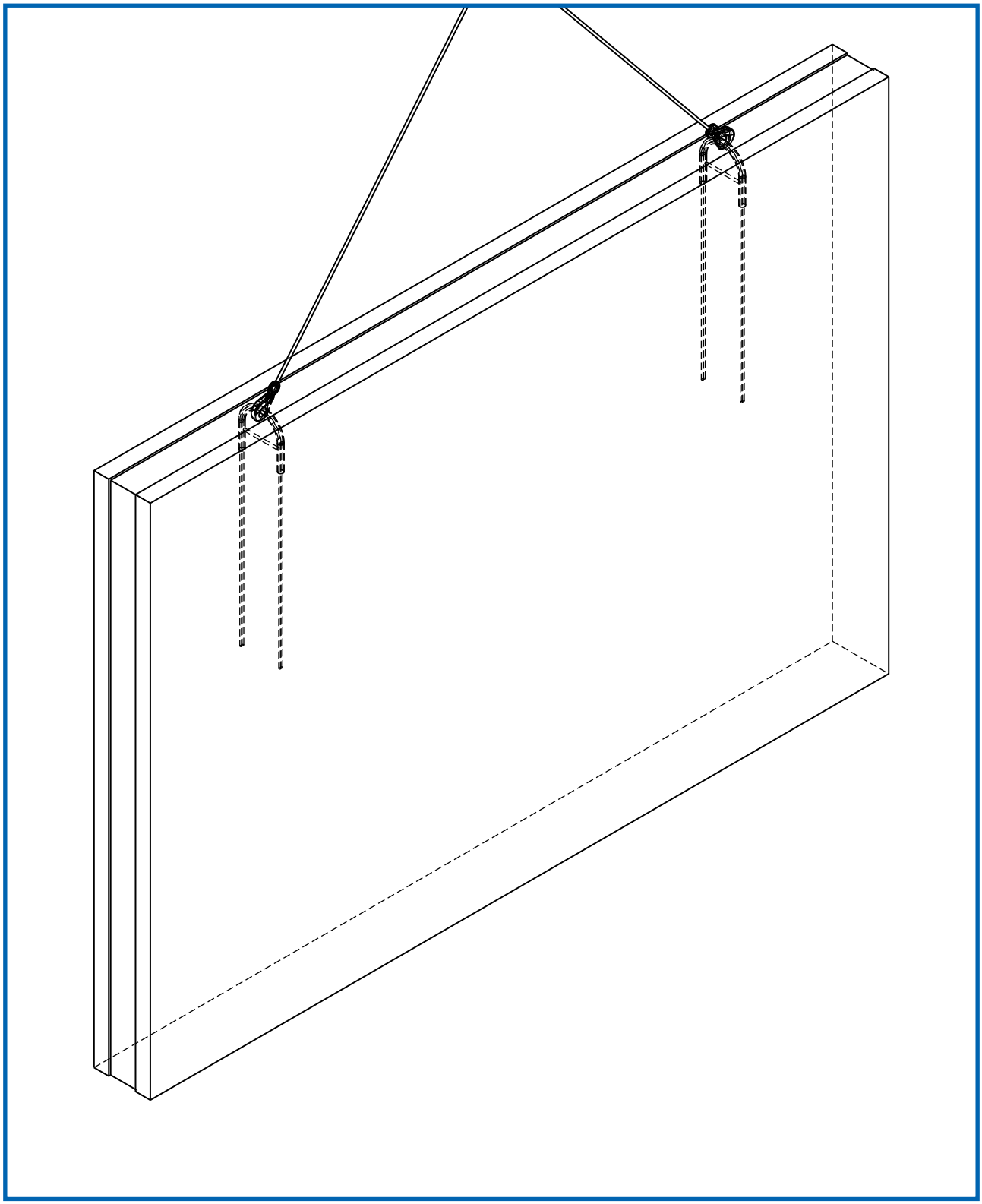

Peikko Group • www.peikko.com