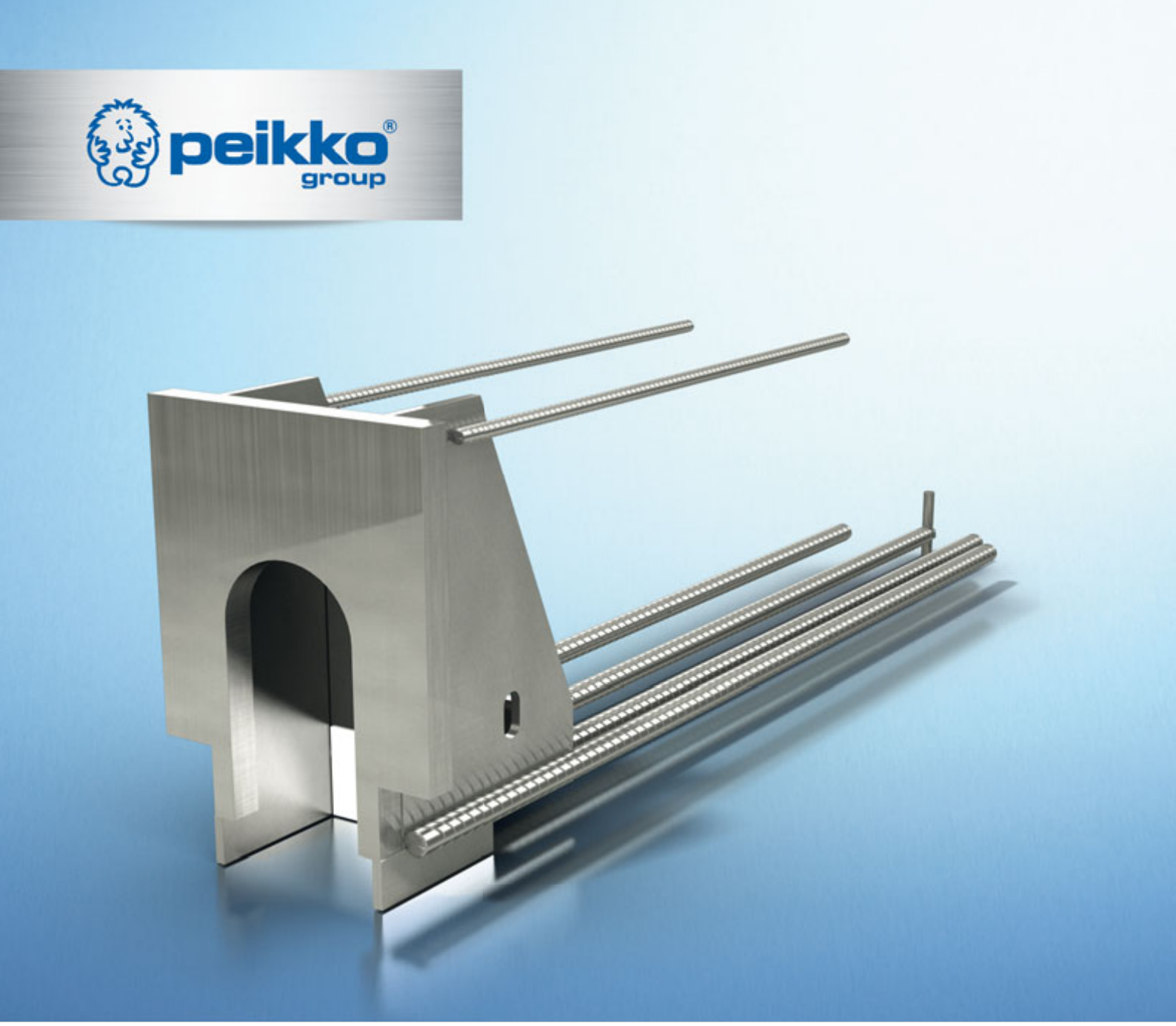

PC Beam Shoe

Corbel system to support beams

Version: **PG 3/2012**

CERTIFIED inspecta ORGANIZATION
ISO 9001
ISO 14001

Technical Manual

PC Beam Shoe

Corbel system to support beams

System benefits

- Easy and fast beam installation
- Fits into low beams and slabs
- Hidden and esthetic connection

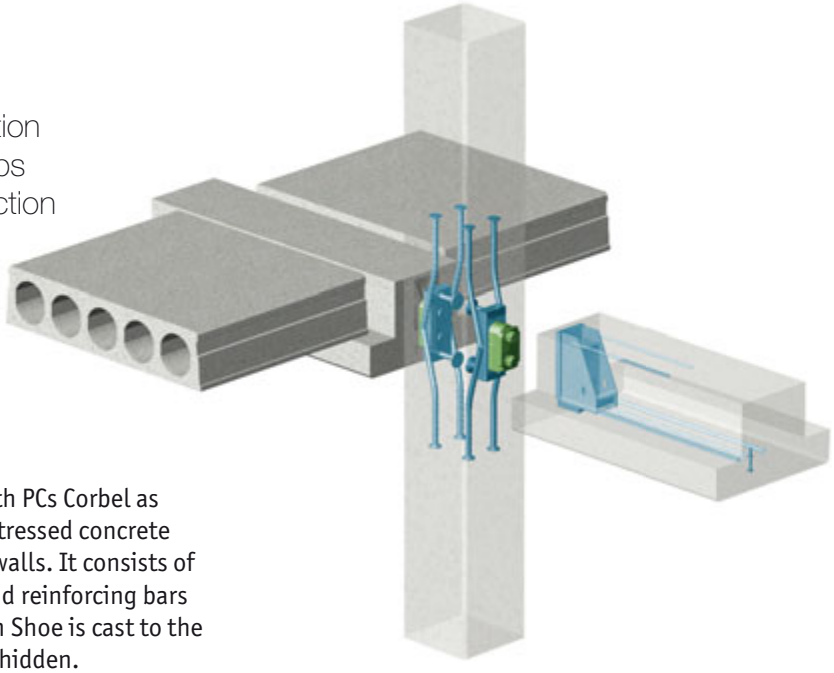

PC Beam Shoe is a building product used with PCs Corbel as vertical support between reinforced or prestressed concrete beams and reinforced concrete columns or walls. It consists of steel plates that form a pocket for corbel and reinforcing bars which anchor forces into the beam. PC Beam Shoe is cast to the beam, where all parts of the beam shoe are hidden.

PC Beam Shoe is dimensioned to be used with PCs Corbel so that the final position of the beam installed on the corbel can be adjusted. After the corbel plate of PCs Corbel is bolted to the column plate, PCs Corbel system may be used without any other additional actions in factory or on site (wedging, welding etc...). The standard models of PC Beam Shoes are designed to withstand vertical and horizontal loads with maximum design value of vertical load to 1500kN.

Contents

About PC Beam Shoe 4

1. Product properties 4

1.1 Structural behavior 5

1.2 Limitations for application 6

1.2.1 Loading and environmental conditions 6

1.2.2 Interaction with beam and column 6

1.2.3 Positioning of the beam shoe 8

1.2.4 Positioning of the beam 10

1.3 Other properties 11

2. Resistances 13

Selecting PC Beam Shoe 14

Annex A – Supplementary reinforcement 16

Installation of PC Beam Shoe last spread

1. Product properties

Standard PC Beam Shoes are always composed of steel plates creating a pocket for PCs Corbel and bearing parts for concrete beam.

PC Beam Shoe is casted into beam together with the main reinforcement of the beam; supplementary reinforcement to ensure the interaction between the PC Beam Shoe and the rest of the beam has to be provided. This supplementary reinforcement is detailed in this Technical Manual (Annex A).

Opening in PC Beam Shoe end plate fits the shape of PCs Corbel plate. This ensures the transfer of vertical load to the column or wall. Horizontal forces are transferred through the contact of beam shoe end plate and washer plate of PCs Corbel.

The joint of PCs Corbel and PC Beam Shoe is not visible in the final construction. Some of the steel parts of PC Beam Shoe can be visible, when the PC Beam Shoe is placed at the bottom of the beam. However no part of the joint stands out from the final construction!

Figure 1 PCs Corbel system (PCs Corbel + PC Beam Shoe) with reinforced concrete beam

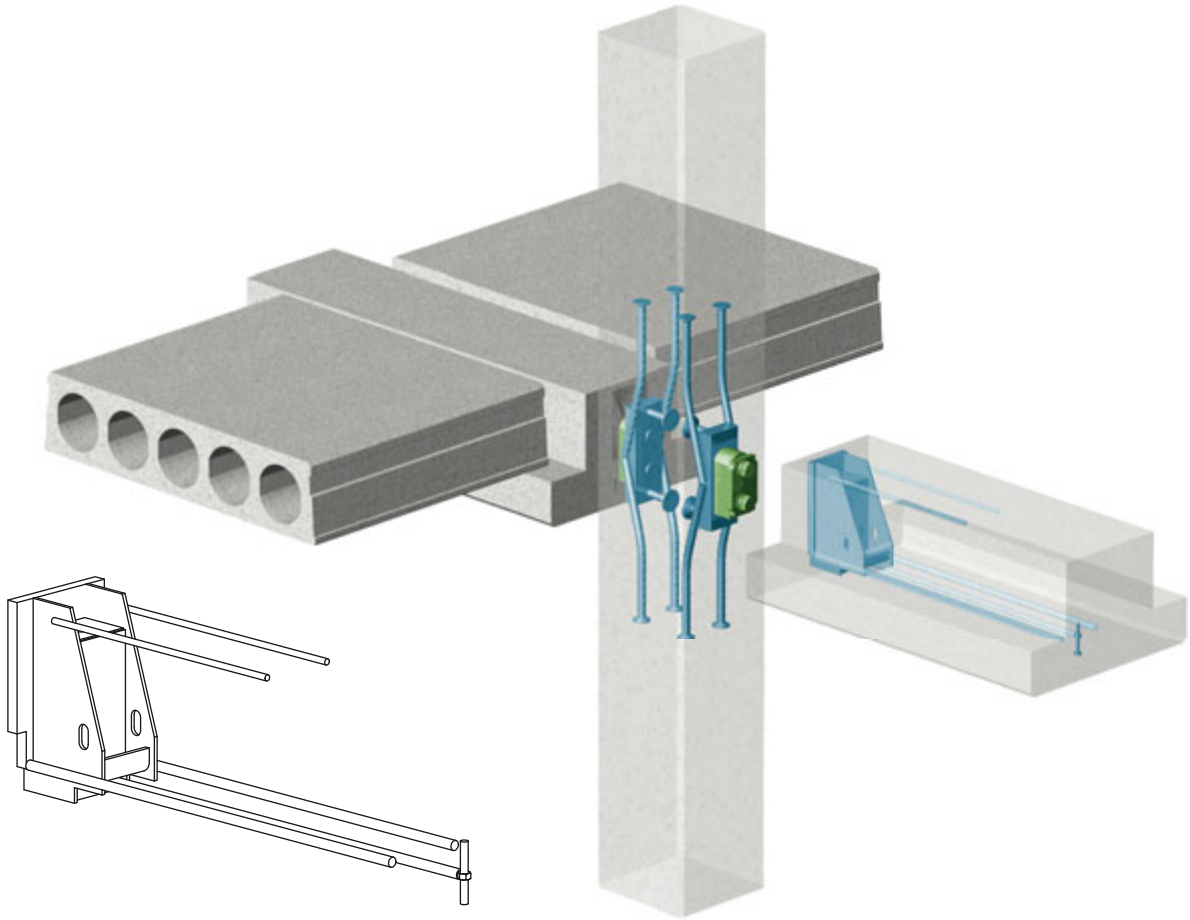

After the hardening of the beam concrete, formwork is removed and the beam is ready to be installed on PCs Corbel. PCs system is able to carry vertical and horizontal loads at assembly time, normal use and fire situation (see Table 6 and Table 7 of this Technical Manual for maximum design values).

PC Beam Shoe is available in two standardized models for each load class (Figure 2):

- for beam with low flange (for example PC 3-L)
- for beam with high flange (for example PC 3-H)

Figure 2 Standard PC Beam Shoe models – type L and type H

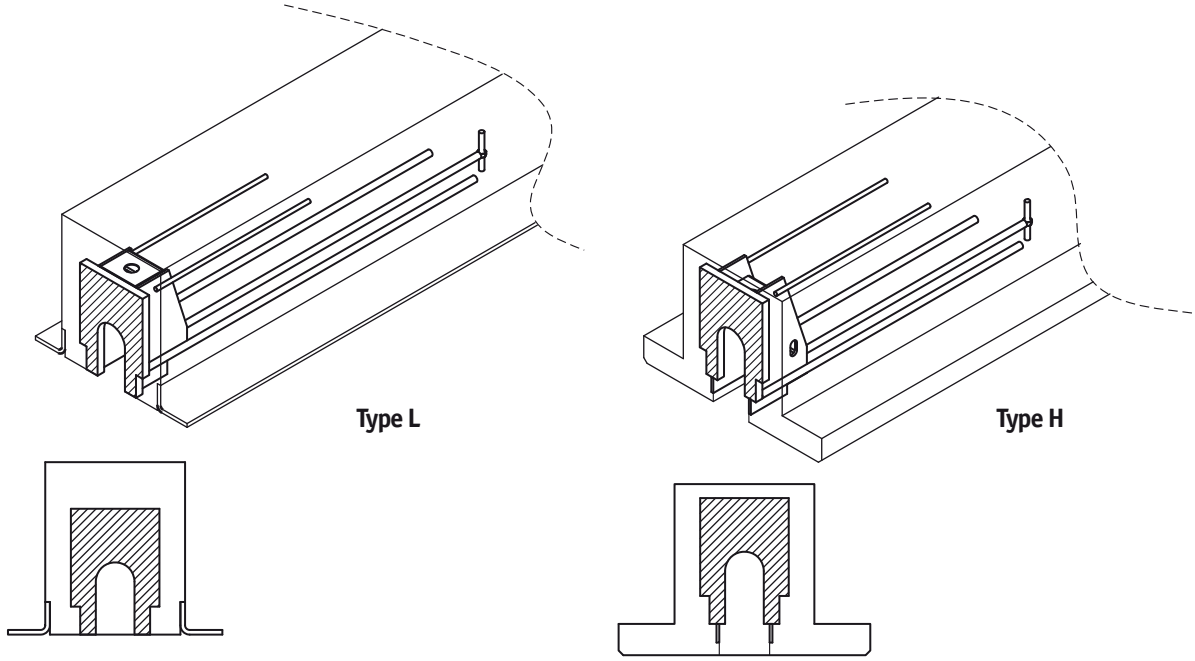

The beam shoe types differ in height. Type –L fits low beams with steel flange and type –H fits beams with concrete flange. In the case of a beam without a flange the shoe type and its location must be considered separately.

1.1 Structural behavior

PC Beam Shoe consists of a box made of steel plates with anchoring bars that transfer loads from beam to the corbel. Transfer of loads between the beam and the corbel are provided by the bearing end plate of the PC Beam Shoe to the corbel plate (vertical loads) or the washer plate (horizontal loads) of PCs Corbel. For this reason, beams supported by PCs Corbel must have an end plate with an opening of a shape that corresponds to the shape of the corbel plate.

Figure 3 Transfer of forces in PC Beam Shoe under vertical and horizontal loading

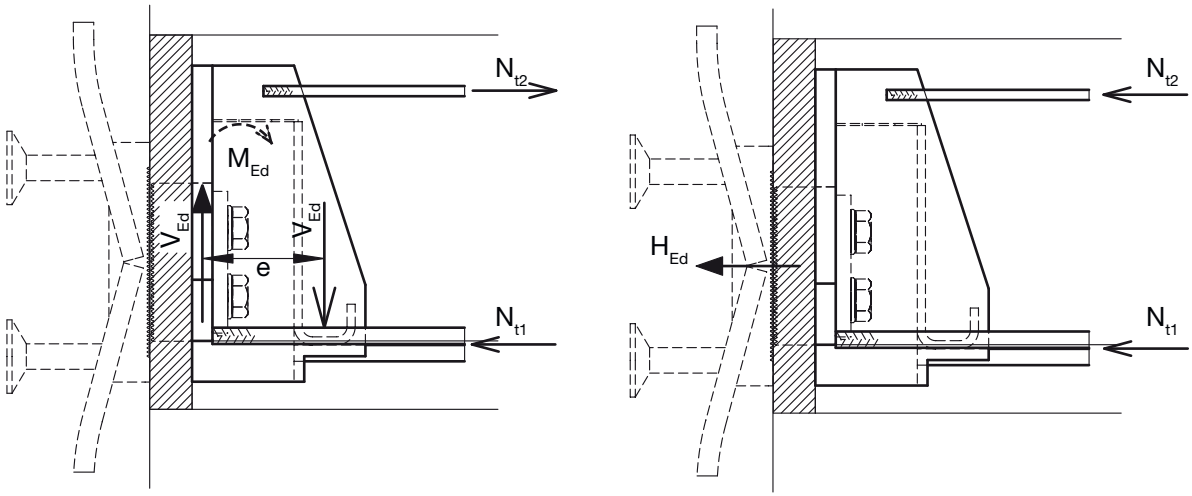

The load transfer mechanism of PC Beam Shoe under vertical and horizontal loading is shown in Figure 3. PC Beam Shoes are pre-designed so that all components of the system have sufficient resistance against actions cased by external loads.

1.2 Limitations for application

The standard models of PC Beam Shoes are pre-designed to be used under conditions mentioned hereafter in this paragraph. In the case when these conditions may not be satisfied, please contact Peikko Technical Support for individual design of PC Beam Shoe.

1.2.1 Loading and environmental conditions

PC Beam Shoes are designed to carry static loads. In the case of dynamic and/or fatigue loads, individual design has to be made. PC beam Shoe is designed to be used in indoors and dry conditions. When using PC Beam Shoe in other conditions, the surface treatment or raw materials must be adequate according to environmental exposure class and intended operating life.

1.2.2 Interaction with beam and column

PC Beam Shoes are pre-designed to be used in reinforced or prestressed concrete beams. The minimum dimensions are summarized in Table 1. Please note that the values in Table 1 are valid for the case when the PC Beam Shoe is placed in the middle of the beam. In the case when the beam shoe is not placed in the middle of the beam, the minimum edge distance of the beam shoe corresponds to $b_{min}/2$, where dimension b_{min} is taken from Table 1.

Table 1 The minimum beam sizes [mm] depend on the type of PC Beam Shoes

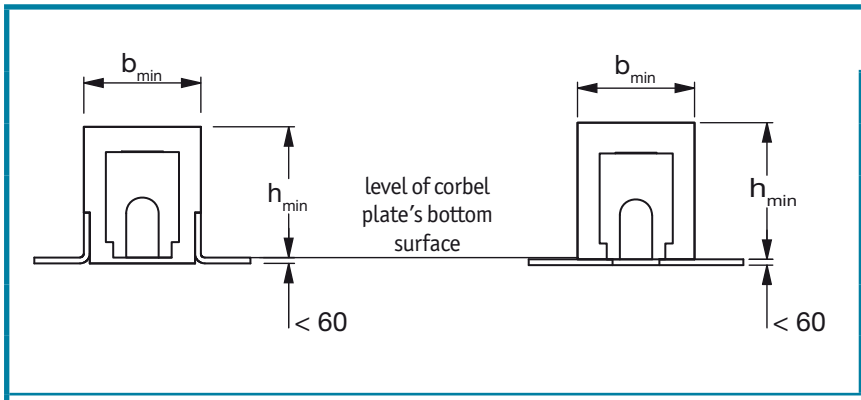

	h_{min} / b_{min}
PC 2-L	250/250
PC 3-L	280/280
PC 5-L	320/280
PC 7-L	380/380
PC 10-L	450/380
PC 15-L	520/520

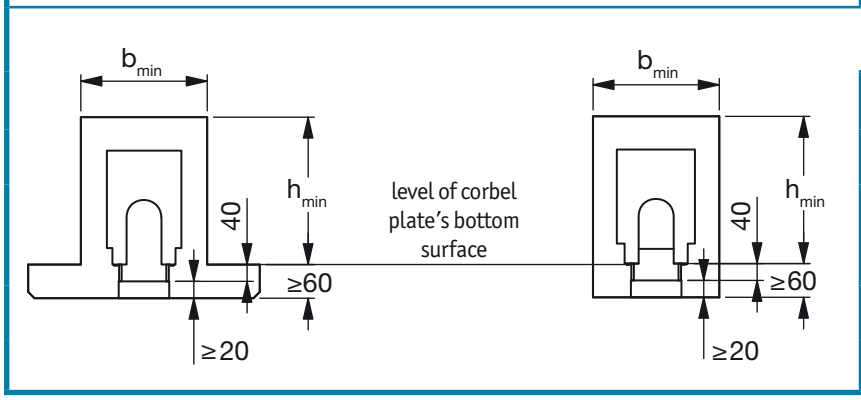

	h_{min} / b_{min}
PC 2-H	250/250
PC 3-H	280/280
PC 5-H	320/280
PC 7-H	380/380
PC 10-H	450/380
PC 15-H	520/520

The standard properties of PC Beam Shoes are guaranteed for reinforced or prestressed beams made of concrete with class at least C40/50. In case when PC Beam Shoes are used in beams made of concrete with lower concrete class, the resistances have to be reduced using factors given in Table 2.

Table 2 Reduction factors for the lower concrete classes

CONCRETE GRADE	C35/45	C30/37
PC 2 – PC 10	0,96	0,81
PC 15	0,91	0,75

The structural properties of PC Beam Shoe may be guaranteed only if the supplementary reinforcement is provided to the beam in accordance with rules of Annex A of this Technical Manual. Please note that this supplementary reinforcement is used in addition to normal and shear reinforcement designed to resist internal forces in the beam. PC Beam Shoe carries a vertical reaction through the PCs Corbel which is eccentric to the center of gravity of the column or wall. This eccentricity generates a bending moment $M_{Ed,1}$ that can be determined as follows:

$$M_{Ed,1} = V_{Ed} \cdot (B/2+e)$$

where the eccentricity e is given in Table 3.

Before the structure is taken into use, the joint between the beam and the column has to be filled with grout. When load is applied to the beam, the rotation of the end of the beam causes a load transfer mechanism shown on Figure 4. The exact value of bending moment transferred by PCs Corbel due to restricted rotation of the beam may be estimated only case by case with regards to moment-rotation properties of the beam. Conservative estimates of bending moment $M_{Ed,2}$ transferred due to restricted rotation at the ends of the beam are given in Table 3. The bending moments in the Table 3 are determined considering that horizontal tensile load H_{Ed} (see paragraph 2 for more information) develops in PCs Corbel. If PCs Corbel is in higher position than indicated in the Table 3 (xb > 50 mm), it is recommended to fill the joint between the end plate and the column with deformable insulation below the corbel. By this way bending moment values presented in Table 3 are still valid.

Figure 4 Moment $M_{Ed,2}$ transferred from the corbel to the column

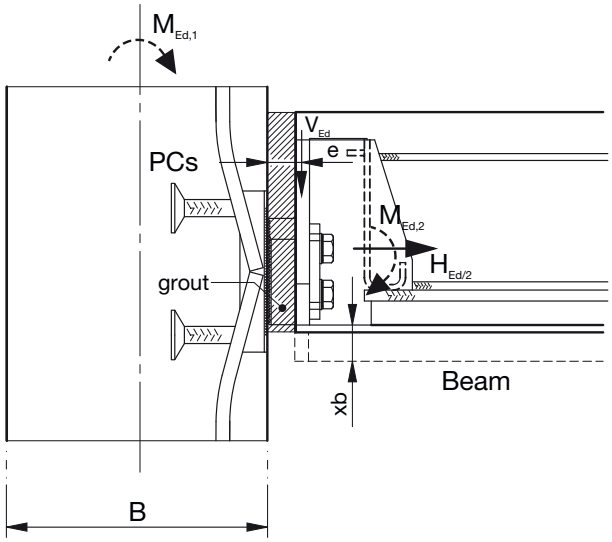

Table 3 The bending moment transferred to the column ($M_{Ed,2}$)

	e [mm]	$M_{Ed,2}$ (xb = 0 mm) [kNm]	$M_{Ed,2}$ (xb = 10 mm) [kNm]	$M_{Ed,2}$ (xb = 50 mm) [kNm]
PC 2-L, H	43	2,7	2,9	3,8
PCs 3-L, H	48	3,7	4,0	5,5
PCs 5-L, H	56	7,7	8,2	10,3
PCs 7-L, H	56	11,9	12,6	15,5
PCs 10-L, H	56	20,8	21,8	25,6
PCs 15-L, H	56	27,2	28,7	34,7

The total value of bending moment generated in the column by PCs Corbel system is:

$$M_{Ed} = M_{Ed,1} + M_{Ed,2}$$

The bending moment M_{Ed} has to be taken into account in the design of the main reinforcement of the column or wall. Please note that in any case, it is recommended to consider PCs Corbel as a simple support of the beam.

1.2.3 Positioning of the beam shoe

Figure 5 Things to be marked on the drawing of the beam when using PC-L beam shoe

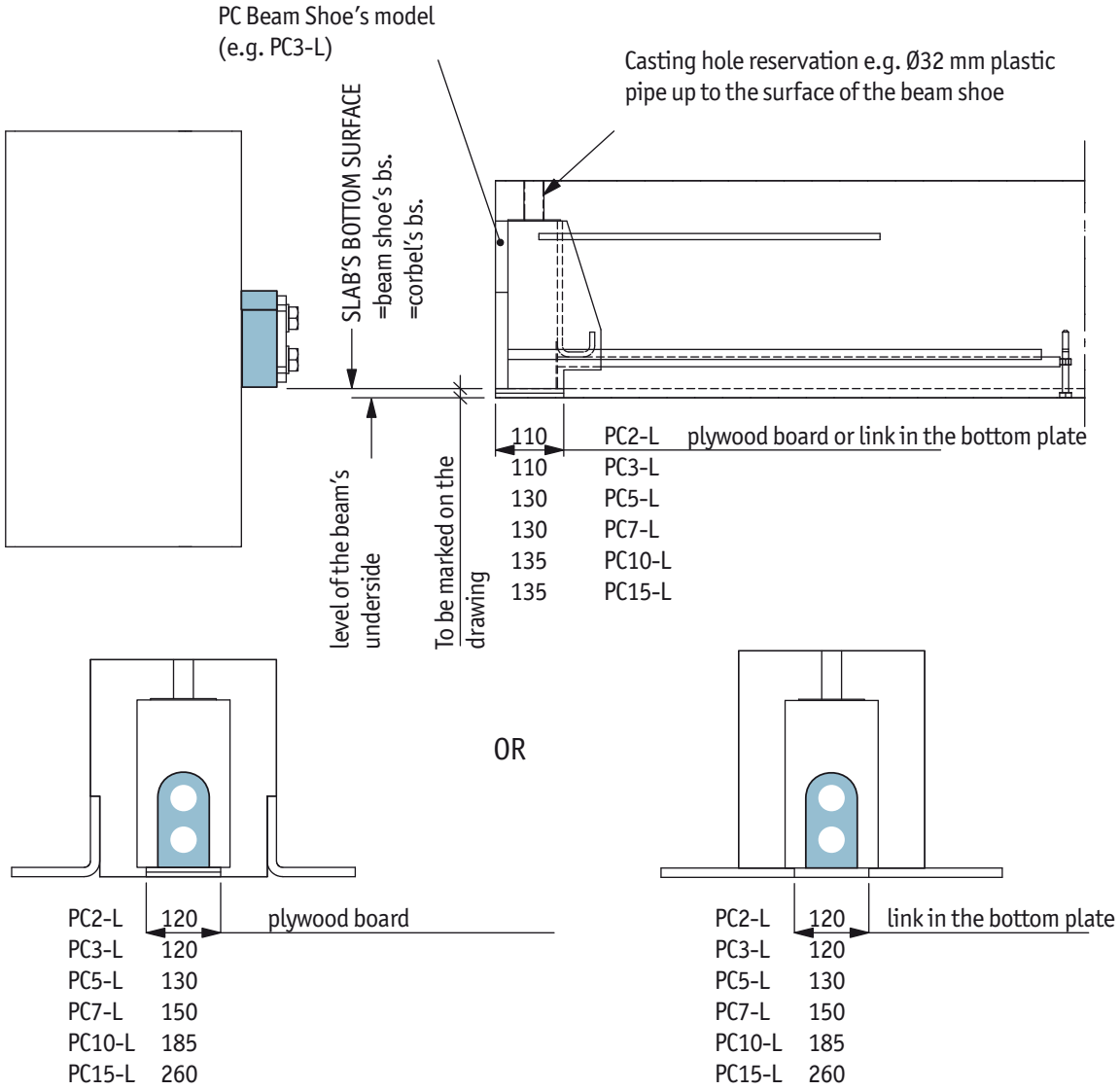

Figure 6 Things to be marked on the drawing of the beam when using PC-H beam shoe

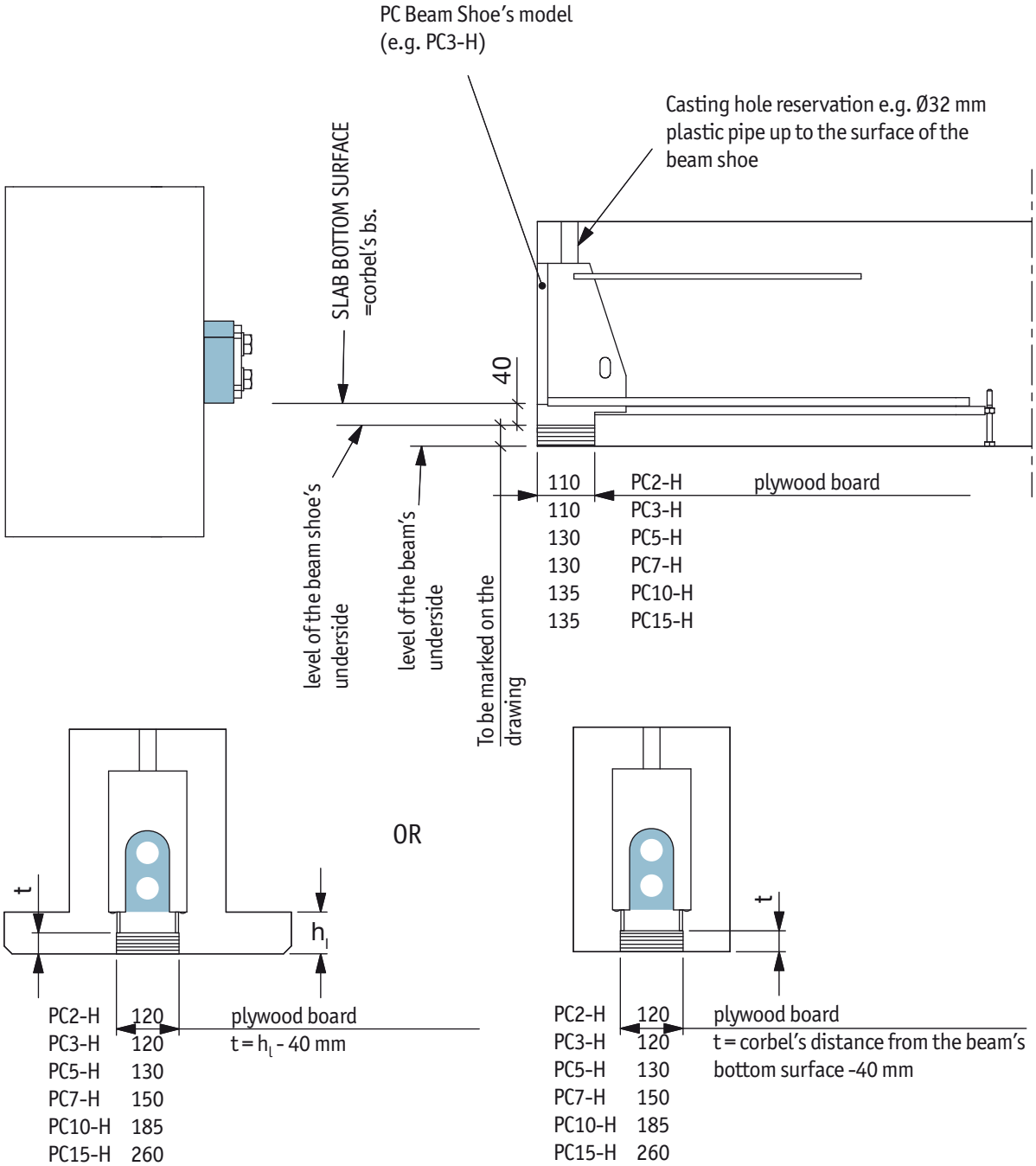

1.2.4 Positioning of the beam

The length of the beam is chosen so that the space between the beam and square column or wall is 20 mm according to the Figure 7. The tolerance for the beam length is ±20 mm in the connection. The tolerance of the beam length is smaller with beams connected to circular column. The length of the beam is chosen so that the space between the beam and the column or wall surface is about 10 mm. Then the tolerance for the beam length is approximately ±10 mm in the connection.

Figure 7 Beam connection to a square column

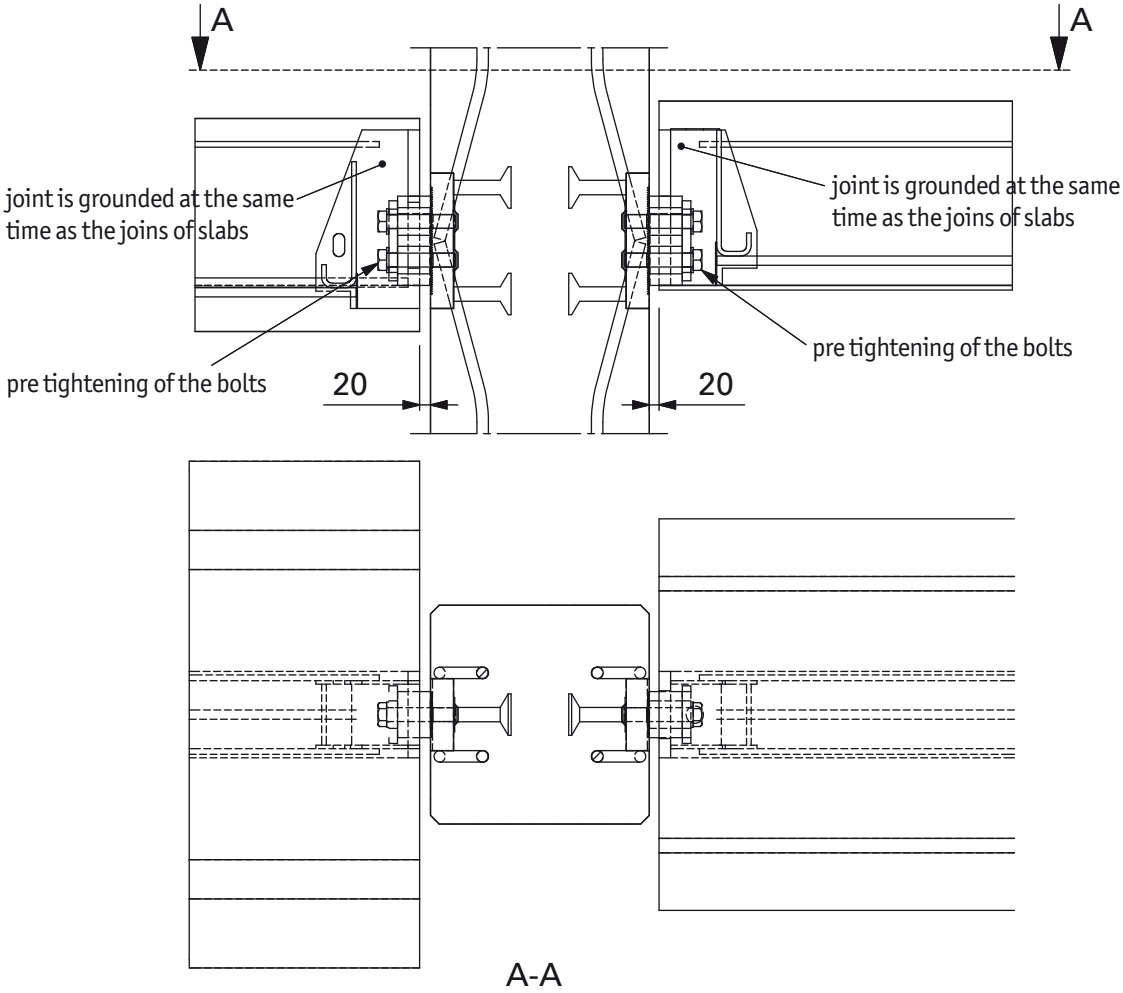

Figure 8 Beam connection to the circular column

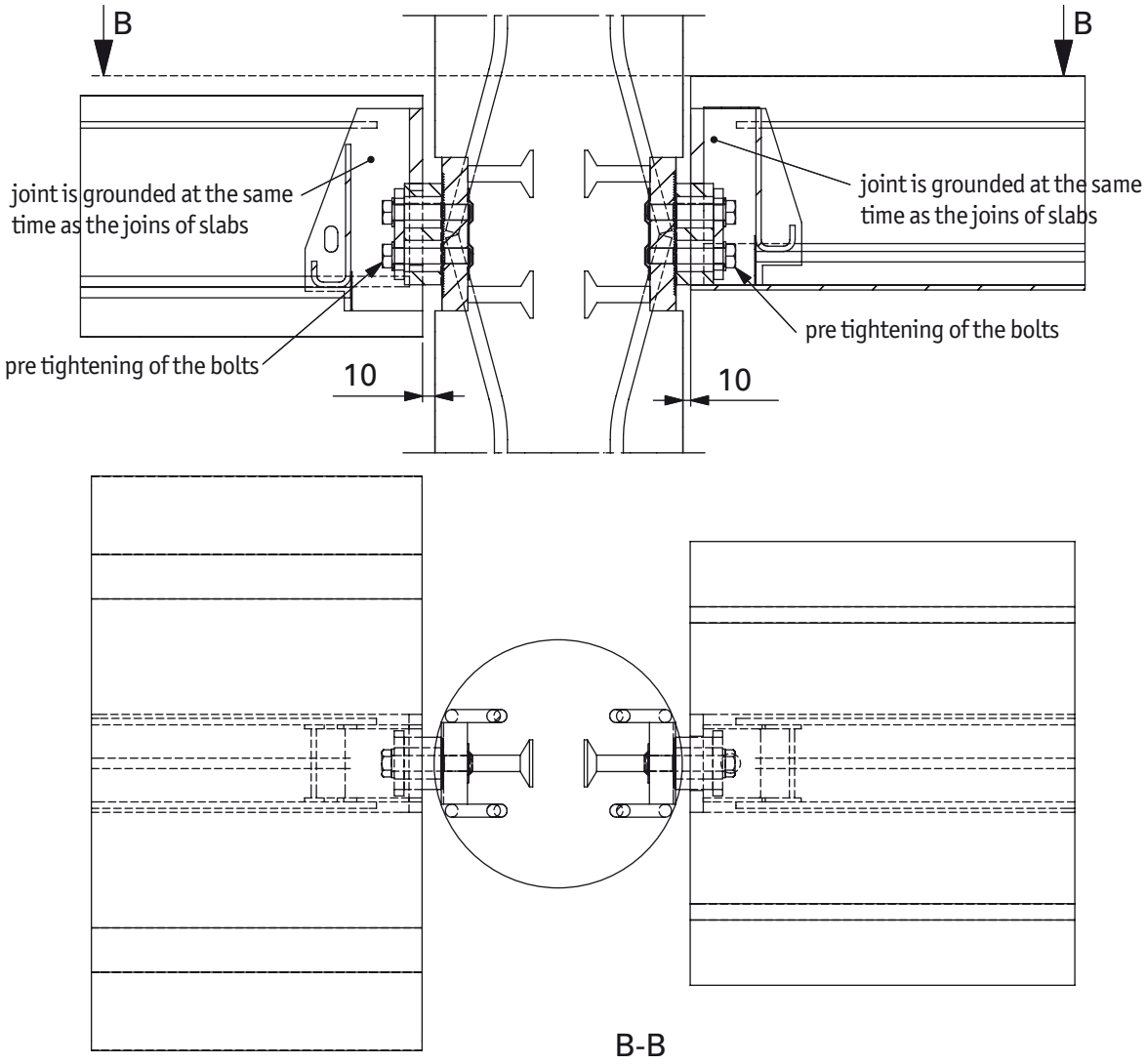

1.3 Other properties

PC Beam Shoes are fabricated of steel plates and reinforcing bars with the following material properties:

Plates	S355J2+N	EN 10025-2
	S355J0	EN 10025-2
Ribbed bars	B500B	SFS 1268, EN 10080
	A500HW	SFS 1215, EN 10080
	BSt 500 S	DIN 488, EN 10080

Peikko Group's production units are externally controlled and periodically audited on the basis of production certifications and product approvals by various organizations, including Inspecta Certification, VTT Expert Services, Nordcert, SLV, TSUS and SPSC among others.

Table 4 Dimensions [mm], weights [kg] and color codes of the beam shoes for low flange beams (PC-L)

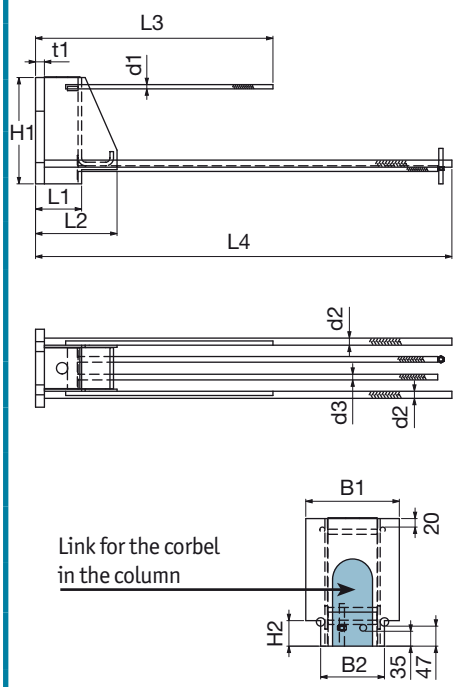

	PC Beam Shoe model					
	PC 2-L	**PC 3-L**	**PC 5-L**	**PC 7-L**	**PC 10-L**	**PC 15-L**
H1	240	270	300	340	410	410
H2	60	60	60	60	60	60
B1	180	190	220	240	270	389
B2	150	150	150	154	220	343
L1	95	110	130	130	135	135
L2	155	170	230	235	315	315
L3	530	535	670	670	915	835
L4	770	1135	1175	1290	1290	1830
t1	15	20	25	25	25	25
d1	10	10	12	12	16	16
d2	16	16	20	20	25	25
d3	16	16	16	20	25	25
weight	12,6	17,4	28,3	35,5	58,5	89,3
colour	red	grey	yellow	green	blue	black

Table 5 Dimensions [mm], weights [kg] and color codes of the beam shoes for high flange beams (PC-H)

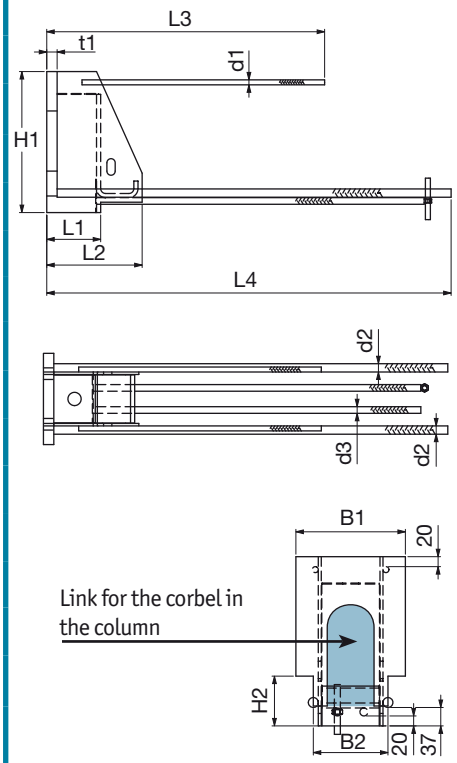

	PC Beam Shoe model					
	PC2-H	**PC3-H**	**PC5-H**	**PC7-H**	**PC10-H**	**PC 15-L**
H1	280	310	340	380	450	450
H2	100	100	100	100	100	100
B1	180	190	220	240	270	389
B2	150	150	150	154	220	343
L1	95	110	130	130	135	135
L2	155	170	230	235	315	315
L3	530	555	670	670	915	835
L4	675	960	975	1140	1145	1630
t1	15	20	25	25	25	25
d1	10	10	12	12	16	16
d2	16	16	20	20	25	25
d3	16	16	16	20	25	25
weight	12,3	16,5	26.8	34.3	59,0	91,8
colour	red	grey	yellow	green	blue	black

2. Resistances

The resistances of PC Beam Shoes are determined by a design concept that makes reference to the following standards:

- EN 1992-1-1:2004/AC:2010
- EN 1993-1-1:2005/AC:2009
- EN 1993-1-8:2005/AC:2005

PC Beam Shoe is designed to take vertical and horizontal loads. The maximum resistances of PC Beam Shoes against these two types of loads are given in Table 6 and Table 7 and are according to corresponding PCs Corbel.

The load transfer mechanism illustrated on Figure 4 shows that usually a horizontal tensile load will be associated to the vertical load acting on the corbel. The value of this horizontal tensile load is usually estimated to H_{Ed}=0,2. V_{Rd} for concrete corbels. For PC Beam Shoe, the resistance against vertical load is determined for the following load combinations:

- Vertical load acting together with horizontal tensile load H_{Ed} that corresponds to 20% of V_{Rd}
- Vertical load without any horizontal tensile load

The characteristic values of resistances of PC Beam Shoes determined for fire exposure classes R60 and R90 are identical to values given in Table 6 and Table 7 for normal use situation.

Table 6 Design values of resistances of PC Beam Shoe (without horizontal tensile load)

Load	Notations	Units	PCs 2	PCs 3	PCs 5	PCs 7	PCs 10	PCs 15
Vertical load	V_{Rd}	kN	230	355	575	785	1010	1500
Horizontal load	H_{Ed}	kN	0	0	0	0	0	0

*Table 7 Design values of resistances of PC Beam Shoe (with horizontal tensile load H_{Ed}=0.2*V_{Rd})*

Load	Notations	Units	PCs 2	PCs 3	PCs 5	PCs 7	PCs 10	PCs 15
Vertical load	V_{Rd}	kN	230	355	520	710	960	1500
Horizontal load	H_{Ed}	kN	46	71	104	142	192	300

PC Beam Shoe has no torsion resistance. Torsion in the connection can be prevented during installation by supporting the beam and during final stage by good cooperation between beam and slab. Both supports and beam's connection to the slab must be designed and defined in plans before they can be taken into account.

Selecting PC Beam Shoe

The following aspects have to be considered when selecting the appropriate model of PC Beam Shoe to be used in a project:

- Load bearing capacity
- Properties of the beam and column or wall
- Position of the beam shoe in the beam

The load bearing capacity of PC Beam Shoe should be verified for the following design situations:

- Assembly time
- Normal use
- Fire situation

If the beam shoe is to be used in an enviroment with higher fire exposure class, it is recommended to lift the beam shoe higher than the bottom level of the slabs, if the beam is thick enough. Then the concrete cover will act as fire protection.

Annex A – Supplementary reinforcement

Ribbed bars on the bottom of the shoe anchor to the main reinforcement of the beam according to their capacity when the distance between shoe anchors and the main reinforcement is ≤ 100 mm. The designer has to check is there a need for supplementary reinforcement anchoring the main reinforcement. Stirrups against splitting are needed in the both ends of the shoe (Figure 9).

Figure 9 Supplementary reinforcement of the beam when the distance between shoe anchors and the main reinforcement is ≤ 100 mm.

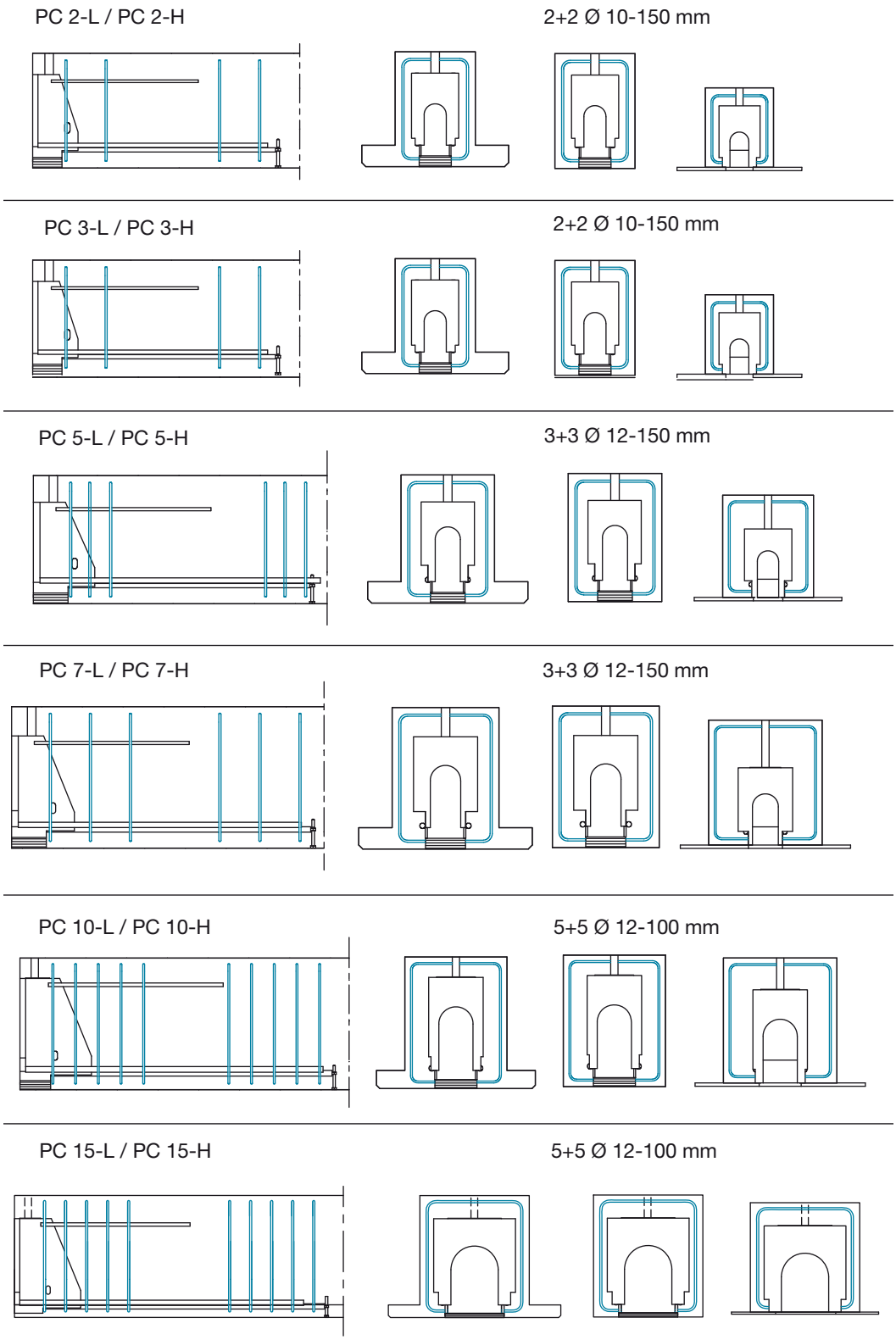

When the distance between the shoe anchors and the main reinforcement is more than 100 mm the end of the beam has to be designed as a link ended beam. Then hanging stirrups are needed and the main reinforcement of the beam has to be anchored by supplementary reinforcement. The supplementary reinforcement for some high beams is shown in Figure 10.

Figure 10 Supplementary reinforcement of the beam when the distance between the anchors of the shoe and the main reinforcement is more than 100 mm.

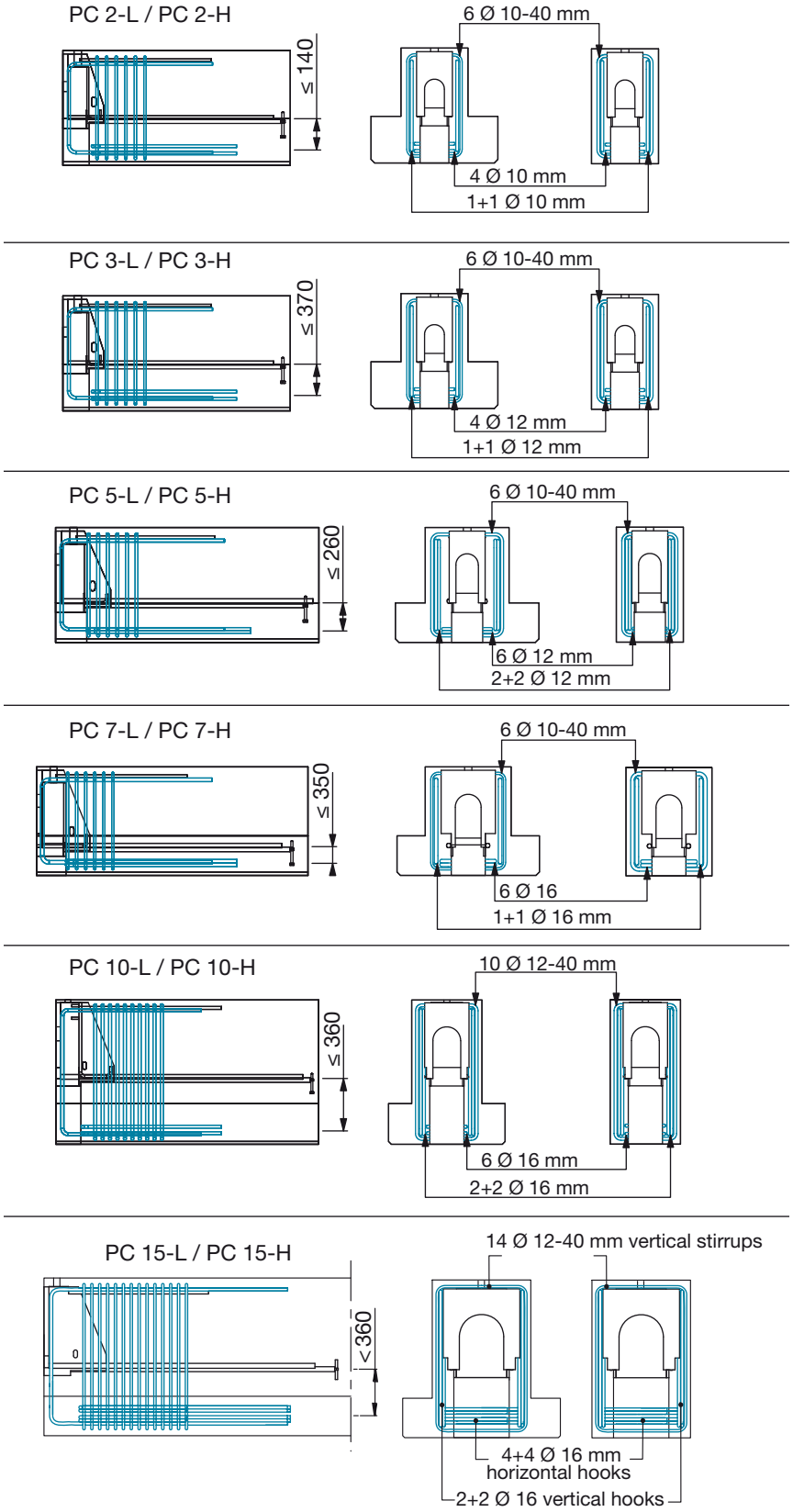

Identification of the product

PC Beam Shoe is available in two different models (e.g. PC-L and PC-H) and six different sizes (2, 3, 5, 7, 10 and 15). Models and sizes can be identified by the name in the label on the product; sizes may be also identified according to color of the product. Color codes are shown in table hereafter.

Figure 11 Standardized models for PC Beam Shoe – type L and type H

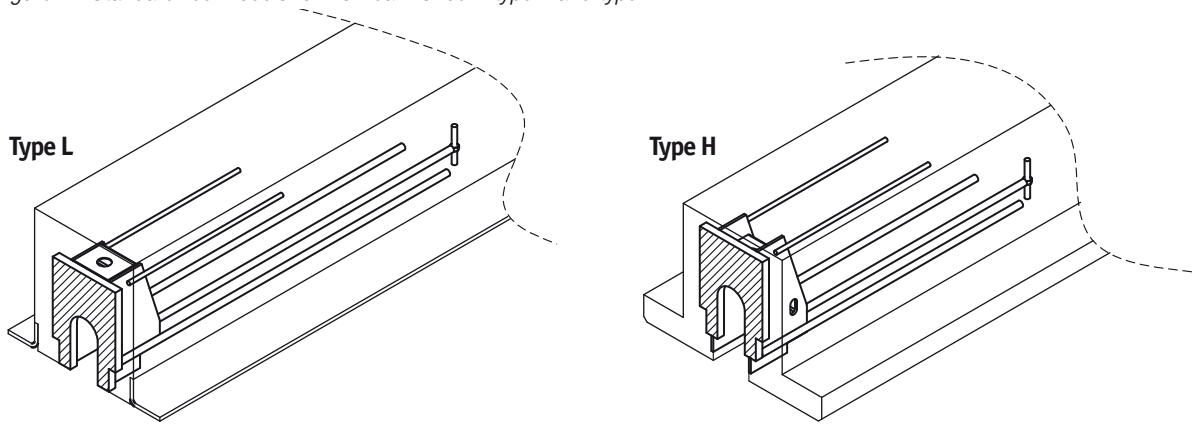

PC 2-L / PC 2-H	PC 3-L / PC 3-H	PC 5-L / PC 5-H	PC 7-L / PC 7-H	PC 10-L / PC 10-H	PC 15-L / PC 15-H
red	grey	yellow	green	blue	black

In precast factory

PC Beam Shoe is installed in the framework according to design plans of the beam together with reinforcement of the beam. PC Beam Shoe is installed so that it will be inside the main stirrups of the beam.

Beam shoe shall be fixed so that it will not move during casting. Pocket for PCs Corbel is formed by steel plates of the PC Beam Shoe, creating the required mould. It is necessary to ensure the bottom opening with plywood board or link in the bottom plate (according to Figure 5 for PC-L or Figure 6 for PC-H of this Technical Manual).

It is recommended to fill up the PC Beam Shoe pocket with polystyrene or equivalent to prevent concrete to fill up the pocket.

Supplementary reinforcement must be placed at the area of beam according to design plans of the beam.

Figure 12 Example of supplementary reinforcement and fixing of PC Beam Shoe before casting

On construction site

Beams are installed and supported according the installation and supporting plans.

Beams will be installed on the corbel so that the slot of the beam will surround the corbel and the end plate of the beam will be in contact with top surface of the corbel plate.

PC Beam Shoes do not bear torsion loads; therefore beams must be supported against rotation during erection and beam must have a good cooperation with slab in final construction so that slab will prevent beam's rotation.

The joint between column and beam is cast at the same time with joints of slabs.

PEIKKO GROUP CORPORATION

Peikko Group, founded in 1965, is a family owned company specializing in composite beams and fastening products for concrete connections. Peikko provides innovative solutions to help customers make their building process faster, easier and more reliable. Precasters, builders, constructors, developers, flooring specialists, machine manufactures, power plant designers, architects and structural designers can all enjoy and take advantage
of the Peikko solutions.

The Group has offices in 30 countries in Europe, North America, and Middle East. The modern production facilities are located in Canada, China, Finland, Germany, Lithuania, Russia, Slovakia, United Arab Emirates, and United Kingdom. Peikko Group, with headquarters in Lahti, Finland, employs more than 800 persons