peikko®

PEC COLUMN SHOES

CERTIFIED inspecta ORGANIZATION
ISO 9001
ISO 14001

Version **PG-1/2012**

PEC Column Shoes

Benefits of Peikko® -column joints

- Saves time, costs and materials
- Easy and fast adjustments of straightness and height of the column without packing
- No need for extensive reinforcement or mould building
- Doesn't need support during installation
- The joint is stiff immediately after installation
- The foundation level can be higher compared to socket joint
- Bolt connection doesn't require in-situ welding

peikko® group

CONCRETE CONNECTIONS

Peikko benefits

- reliable: passed demanding test program
- competitive price and delivery time
- economical and easy to use in designing, manufacturing and installation of the elements

CONTENTS

Version 1/2012

1. DESCRIPTION OF THE SYSTEM 4

2. DIMENSIONS AND MATERIALS 5

3. MANUFACTURING 5

3.1 Manufacturing method 5

3.2 Quality control 5

4. DESIGN RESISTANCES 6

5. APPLICATION.....6

5.1 Limitations for application 6

5.2 Design principles 6

5.2.1 Erection stage 6

5.2.2. The concrete cover thickness 7

5.2.3. Column's reinforcement 7

5.2.3.1 Details for additional reinforcement with PEC column shoes 8

5.2.4 Joining to foundations and column-to-column splices 10

5.3 Minimum column sizes using standard column shoes 10

5.4 Special column shoes 11

5.4.1 Column shoes on an integrated steel plate 11

6. INSTALLATION 11

6.1 Installation tolerances of column shoes 11

6.2 Installation of the column shoes to the mould 11

6.3 Erection of the precast column on site 12

7. USING Peikko Designer®-SOFTWARE.....14

7.1 Instructions for use 14

PEC COLUMN SHOES

1. DESCRIPTION OF THE SYSTEM

Peikko® PEC column shoes are fastening items which are used to create moment stiff connections between prefabricated columns and foundations or splices between columns.

All the forces on the column are transferred with column shoes, bolts and joint grouting to the load bearing member, for example to the foundation.

A prefabricated column is fastened to anchor bolts which are cast into the base of the structure. Fastening is achieved with nuts and washers attached to the anchor bolts. It is also possible to set the column at the correct height level and vertical position. The joint between column base and member below including the bolt recesses should be grouted before loading the column by other structures. After grout is hardened the connection parts and joint grout will work as reinforced concrete structure.

The number of column shoes in the column depends on the dimensions of the column, forces on the column, grade of the grout and type of column shoe used. Usually four column shoes are enough to create a bending stiff connection.

Figure 1. Precast column splice and column - foundation connection made with column shoes and anchor bolts

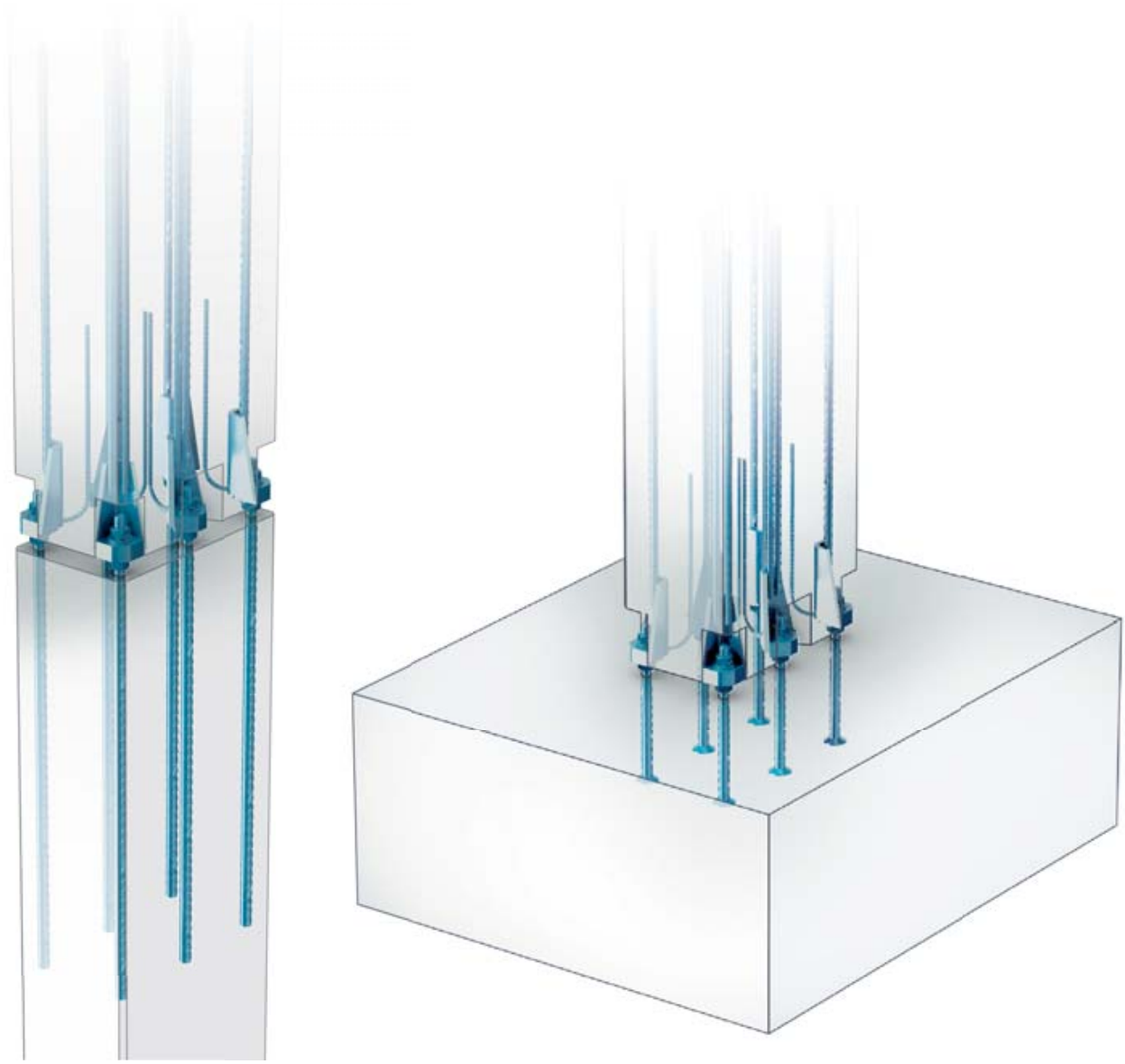

2. DIMENSIONS AND MATERIALS

Materials and standards:

Steel plates	S355J2+N	EN 10025
Anchor Bars	B500B	EN 10080
	BSt 500 S	DIN 488
	A500HW	SFS 1215

Table 1. Dimensions [mm] and weights [kg] of the PEC column shoes.

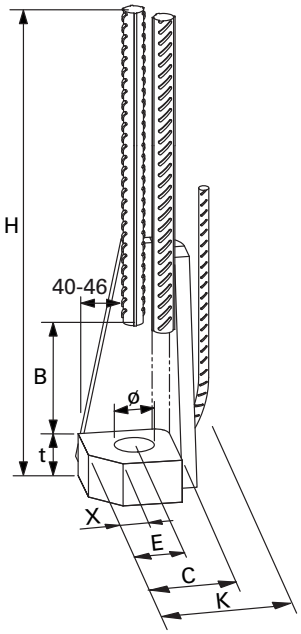

	PEC 30	PEC 36	PEC 39	PEC 45	PEC 52	tolerances
B	130	140	150	150	150	+3, -0
C	105	115	120	130	135	+2, -0
E	50	60*	60	60	60	± 1
H	1455	1845	1975	2340	2690	± 10
t	40	50	55	60	70	
Ø	45	55	55	65	70	+2, -0
X	30	37	37	37	37	
K	173	194	209	248	288	
weight	19,1	30,3	38,2	63,1	96,9	
color code	black	red	brown	violet	white	

* Note! Distance from edge differs from PPKM 36.

3. MANUFACTURING

3.1 Manufacturing method

Plates	Flame and mechanical cutting
Ribbed bars	Mechanical cutting
Welding	MAG by hand or with a robot
Welding class	C (EN ISO 5817)

3.2 Quality control

Peikko Group's production units are externally controlled and periodically audited on the basis of production certifications and product approvals by various organizations, including Inspecta Certification, VTT Expert Services, Nordcert, SLV, TSUS and SPSC among others.

Products are marked with the emblem of Peikko Group, the type of the product and date of manufacturing.

4. DESIGN RESISTANCES

The design resistance values in the table are according to the Eurocode 2 and 3 and ETAG 001, Annex C. If you require capacities according to other regulations, please contact Peikko's technical support. The design resistances of the column shoes are related to the anchor bolts resistances. The decisive factors in the connection are stress area of the thread and material grade.

Table 2. The design resistances of the column shoes [kN] for concrete grade C30/37.

Column shoe	Anchor bolt	Acc. to ETAG 001	
		N_{Rd}	$V_{Rd,s}$
PEC 30	PPM 30	299,2	33,5
PEC 36	PPM 36	435,7	52,6
PEC 39	PPM 39	520,5	64,4
PEC 45	PPM 45	696,5	88,6
PEC 52	PPM 52	937,6	124,1

Example calculation: column shoe PEC 36 + anchor bolt PPM 36:

$$N_{Rd} = \frac{A_{sp} \cdot f_{uk}}{\gamma_{Ms}} = \frac{817 \cdot 800}{1{,}50 \cdot 1000} = 435{,}7 \text{ kN}$$

A_{sp} = stress area of the bolt thread
f_{uk} = tensile strength of reinforcement bar
γ_{Ms} = partial material safety factor according to ETAG 001, Annex C, equation 3.3a

The design shear resistance VRd,s of single column shoe and single anchor bolt can be calculated according to the ETAG 001, Annex C (Guide for European Technical Approval), Equation 5.5. The total design shear resistance of column connection can be calculated according to EN 1993-1-8, Equation 6.3:

$$V_{Rd} = n \cdot V_{Rd,s} + c_{f,d} \cdot N_{c,Ed}$$

Where:

- n = the number of anchor bolts in the connection
- $V_{Rd,s}$ = the design value of shear resistance of one single anchor bolt, see table above
- $c_{f,d}$ = the coefficient of friction between base plate and grout layer = 0,20
- $N_{c,Ed}$ = the design value of minimum normal compressive force in the column

When used coefficient of friction value is 0,2 (sand-cement mortar), there is no need for additional testing of grout.

5. APPLICATION

5.1 Limitations for application

The design resistances of the column shoes have been calculated for static loads. In the case of dynamic and fatigue loads, greater safety factors have to be used individually for each case. If the application condition temperature is below –20 °C, it is necessary to consider using materials with better cold impact resistance according to standard EN 10025-2. The coldest application and working temperature by Eurocodes design shall be defined according to standard EN 1991-1-5 and National Annex.

5.2 Design principles

The type of the column shoes and the thickness of grout layer define the height level of the bolt from the surface of the concrete base. Nominal height levels are shown in table 8.

5.2.1 Erection stage

The erected column is considered to be in erection stage before the grouting work is done and grout has reached designed strength.

The design resistance during erection time is to be checked according to ETAG Annex C or the Technical Specifications CEN/TS 1992-4-1 and 1992-4-2. It can be checked with Peikko Designer Column Connection dimensioning program too.

For columns which are installed only on bolts without grouting, the bolts should be checked and controlled for the bending and buckling caused by wind load and dead load (own weight of the column). If the resistance of the bolt is not sufficient, bigger bolts or bigger amount of bolts must be used or the column shall be braced during erection time. The larger wind loading area due to possible consoles shall be taken into account when defining wind load.

The grouting of the joint and bolt recesses should be done as soon as possible after erecting the prefabricated columns. When grout has reached sufficient strength according to instructions of grouting material producer, upper structures (e.g. beams) can be installed on the column.

5.2.2. The concrete cover thickness

The fire-resistance period and environment class, in which the column and column shoes are situated, defines the concrete cover thickness according to local regulations. The concrete cover thickness shall be defined according to standard EN 1992-1-1, chapter 4 and EN 1992-1-2 guidelines.

The concrete cover thickness of the reinforcement bars of the shoe is 47 mm in PEC column shoes when the column shoes are located at the corners of the column. A greater concrete cover thickness can be achieved by moving the column shoe closer towards the centre of the column. Location and level of the anchor bolts which corresponds to column shoes have to be presented in the foundation plans or corresponding concrete component plan.

5.2.3. Column's reinforcement

The space required by recess boxes and the tolerances of reinforcement bars have to be taken into account when defining the length of column's main reinforcement.

The lower end of the column above the bolt recesses is reinforced as shown in chapter 5.2.3.1. The lap zone of column reinforcement and anchor bars of column shoes shall be reinforced according to Eurocode 2.

5.2.3.1 Details for additional reinforcement with PEC column shoes

Column shoe type PEC 36 shown in the pictures.

Transverse reinforcement in the lap zone is to be done according to Eurocode 2 (8.7.4 and 9.5.3). Spacing of the stirrups c/c ≤150 mm with PEC column shoes.

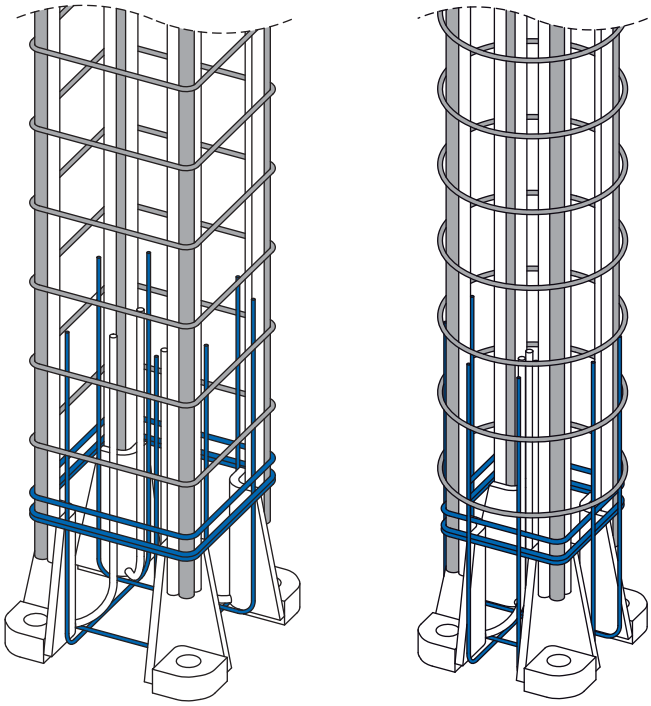

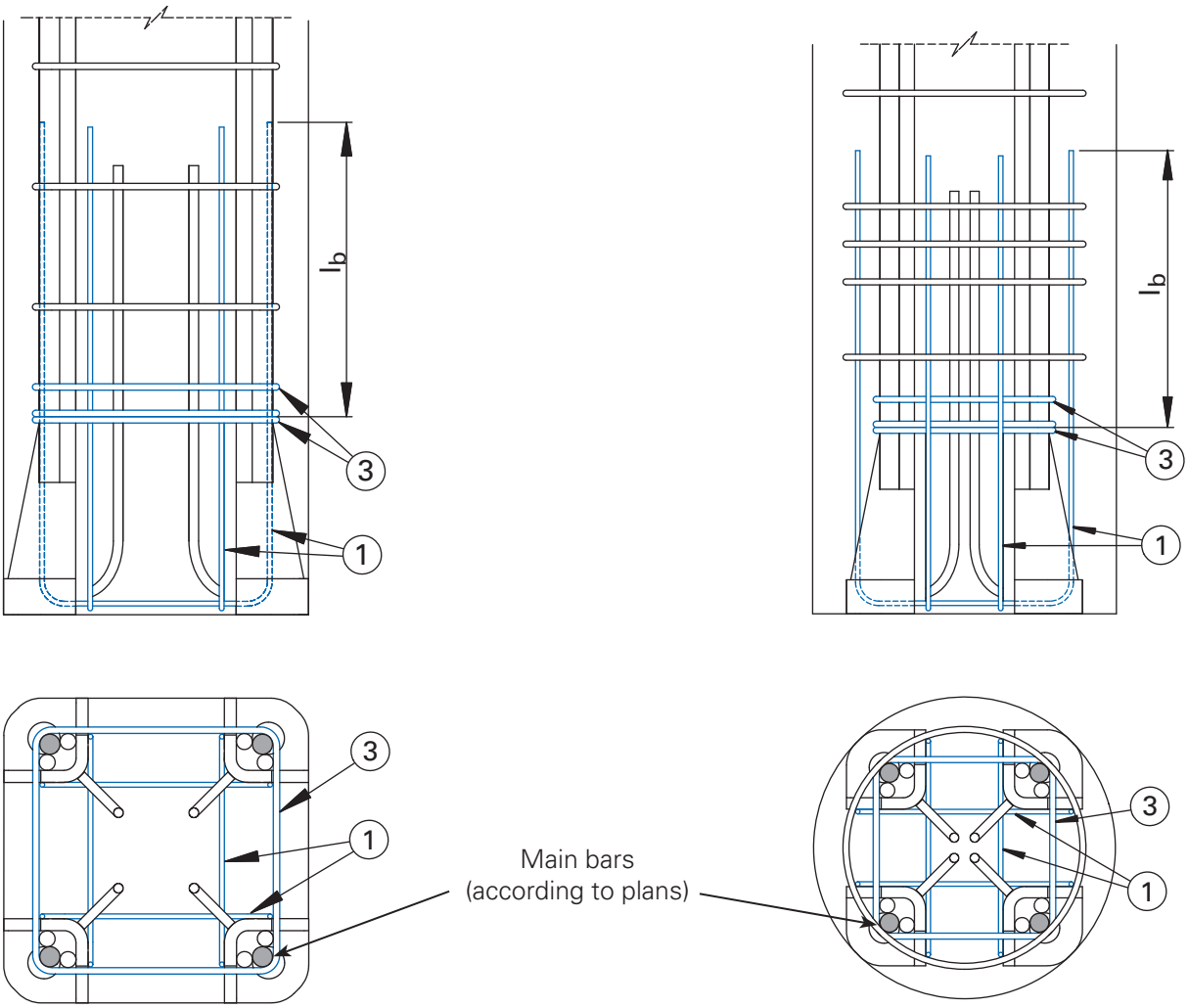

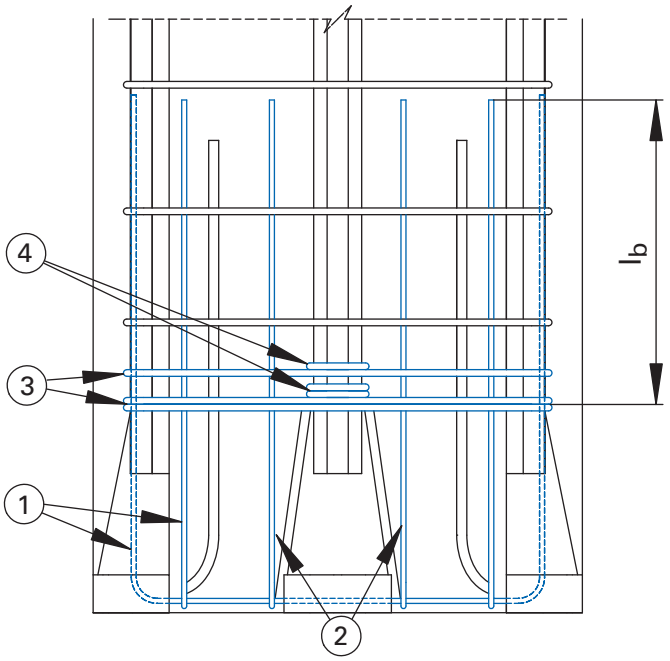

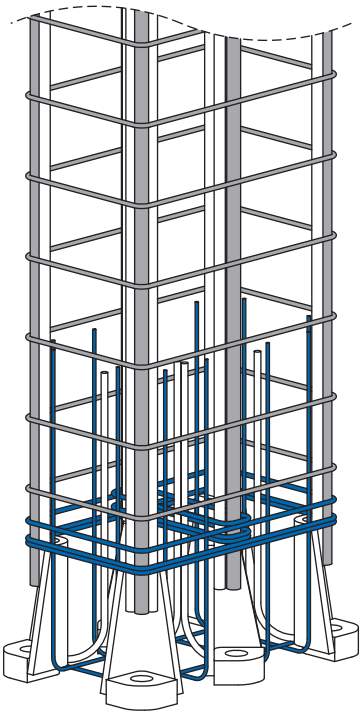

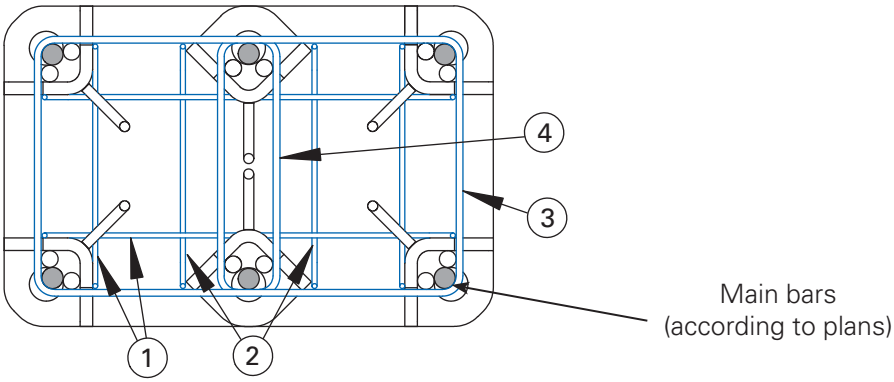

Table 3. The required stirrups (B500B) for column shoes and the minimum length of lb (U-stirrup's bar above column shoe's side plate).

		PEC 30	PEC 36	PEC 39	PEC 45	PEC 52
U-stirrups	1	4 Ø 6	4 Ø 8	4 Ø 10	4 Ø 10	4 Ø 10
U-stirrups for middle shoes / pair	2	2 Ø 6	2 Ø 8	2 Ø 10	2 Ø 10	2 Ø 10
stirrups	3	2+2 Ø 8	2+1 Ø 10	2+2 Ø 10	3+2 Ø 12	3+2 Ø 12
middle stirrups	4	2+2 Ø 8	2+1 Ø 10	2+2 Ø 10	3+2 Ø 12	3+2 Ø 12
a		280	330	375	415	460
b		40	40	50	55	55
l_b		≥300	≥500	≥600	≥600	≥600

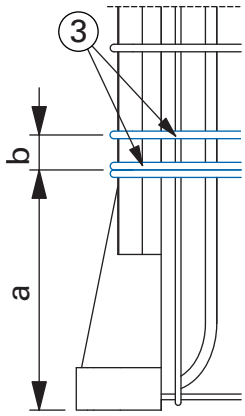

*Measure b is to the middle of reinforcement bundle or single bar

5.2.4 Joining to foundations and column-to-column splices

Table 4. The expansion of the 'Δ min' [mm] and splitting stirrups.

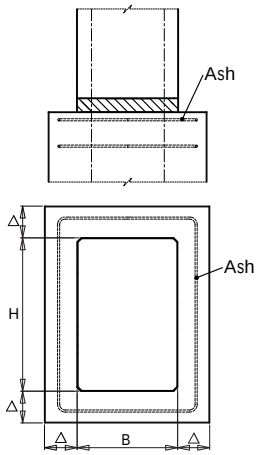

concrete grade (column)	concrete grade (foundation)	the bolts of the tension side yield a = Δ [mm]	cross section compressed a = Δ [mm]	Required section area of stirrups (double shear action) Ash [mm²]
C30/37	C25/30	a=0,06 x H	a=0,10 x H	BxH/ 933
C35/45	C25/30	a=0,12 x H	a=0,20 x H	BxH/ 474
C40/50	C25/30	a=0,18 x H	a=0,30 x H	BxH/ 320
C50/60	C35/45	a=0,13 x H	a=0,21 x H	BxH/ 317
C60/75	C35/45	a=0,22 x H	a=0,36 x H	BxH/ 193

The concrete strength of the lower column, in the column-to-column splice should be at least the same as the concrete strength of the upper column.

5.3 Minimum column sizes using standard column shoes

Table 5. Standard column shoes in the rectangular column [mm].

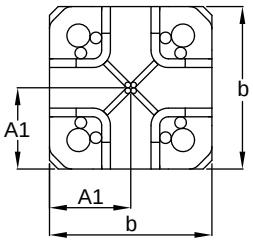

	PEC 30	PEC 36	PEC 39	PEC 45	PEC 52
A1	173	194	209	248	288
b_{min}	350	390	420	500	580

Table 6. Standard column shoes in the circular column [mm].

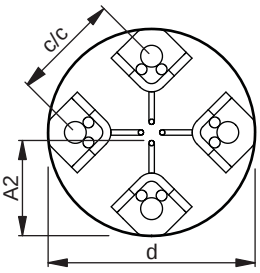

	PEC 30	PEC 36	PEC 39	PEC 45	PEC 52
A2	220	245	266	320	375
d_{min}	440	490	540	640	750

$$c/c = \frac{d - 2E}{\sqrt{2}}$$ (*E* from table 1)

If column shoes should be placed in the smaller column section, please contact Peikko's technical support.

The minimum centre distances of the anchor bolts for the unreduced resistances can be found from Peikko® PPM and HPM anchor bolts manual.

5.4 Special column shoes

Special column shoes might be needed for example in small circular column sections or on the side of the wall-like columns as middle shoes. Column shoes can also be made with an integrated steel plate.

5.4.1 Column shoes on an integrated steel plate

Integrated steel plate is used if the column shoes are too big for the column's section or the plate is used as a mould. The plate can be made the same size as the column's section or just part of it.

Figure 3. Column shoes on an integrated steel plate.

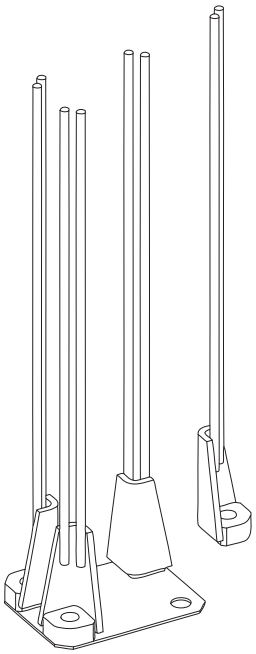

6. INSTALLATION

6.1 Installation tolerances of column shoes

Installation tolerances of column shoes in a crosswise direction of the column ± 2 mm

6.2 Installation of the column shoes to the mould

The column shoes are placed into the column's reinforcement and fixed through their bottom plates to the mould's end plate with fixing screw. There are separate recess boxes available for shoe types PEC 30-52 which also enable the shoes to be fastened to the end plate of the mould with provided screw.

There are two main types of recess box types, corner boxes (CBOX) and middle boxes (MBOX). CBOX is used with column shoes fixed in corner of the column, MBOX is used with column shoes fixed to side of the column. These parts have the same color as corresponding column shoes so that they can be matched easily.

Fixing of the shoe is made with M16 wing screw and special bushing. With help of bushing the shoe will centralize itself according to hole made to mould's end plate.

Product code for purchase orders e.g. PEC 36 CBOX.

A check list before casting

- The right type and size of column shoe is being used
- Column shoes are fixed in the right position
- Anchor bars of the column shoe are tied into the main reinforcement
- Recess boxes are in right place and filled if necessary

A check list after casting

- No changes has occurred in shoe position
- Shoe has not rotated
- Possible joint casting tubes are not filled with concrete
- Recess boxes and cement-paste has been removed
- In addition instructions of standard EN 13670, Execution of concrete structures, should be considered.

Figure 3. Column shoe fixed to the mould with recess box, spacer and fixing screw.

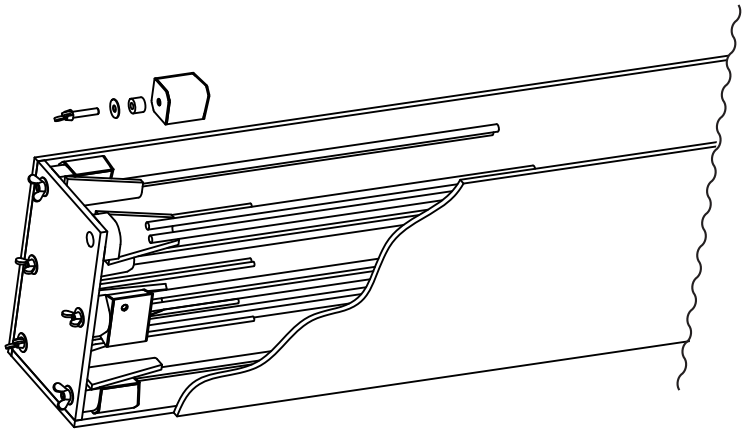

6.3 Erection of the precast column on site

The lower nuts and washers of the joining anchor bolts are adjusted on the correct level. The column is installed directly on pre-leveled washers and nuts of the bolts or by using extra leveling shims under the column which are left in place. Upper nuts and washers are tightened at least to a snug-tight condition, e.g. with slogging ring wrench acc. to DIN 7444 or open ended slogging spanner acc. to DIN 133, and small sledgehammer. After nuts are tightened the crane can be released from the column. The erection must be done according to the examined erection plan. Instructional torque values are shown in the table below.

Table 7. Instructional torque values of nuts. Tightening of nuts shall be done with special care to avoid over-tightening.

Bolt type	T_{min}	T_{max}
	[Nm]	[Nm]
PPM 30	200	800
PPM 36	220	1400
PPM 39	220	1800
PPM 45	250	2800
PPM 52	300	4500

Installation instructions can be found also in Peikko® PPM and HPM anchor bolts manual.

Bolt recesses are designed according to slogging ring wrench according to standard DIN 7444.

After the column is erected at right level and position, and each nut is brought at least to a snug-tight condition, the joint and bolt recesses are grouted by following instructions from concrete provider. It's not permitted to erect upper member of structures on the column before grout layer and grouts of recesses have reached sufficient strength. The grout must be non-shrinking type and match plans. The strength must be equivalent or higher than the designed concrete grade of the column.

Figure 4. Erection steps of precast concrete column. From left to right: 1. lifting column on the bolts 2. alignment of the column and tightening the nuts 3. grouting joint and recesses

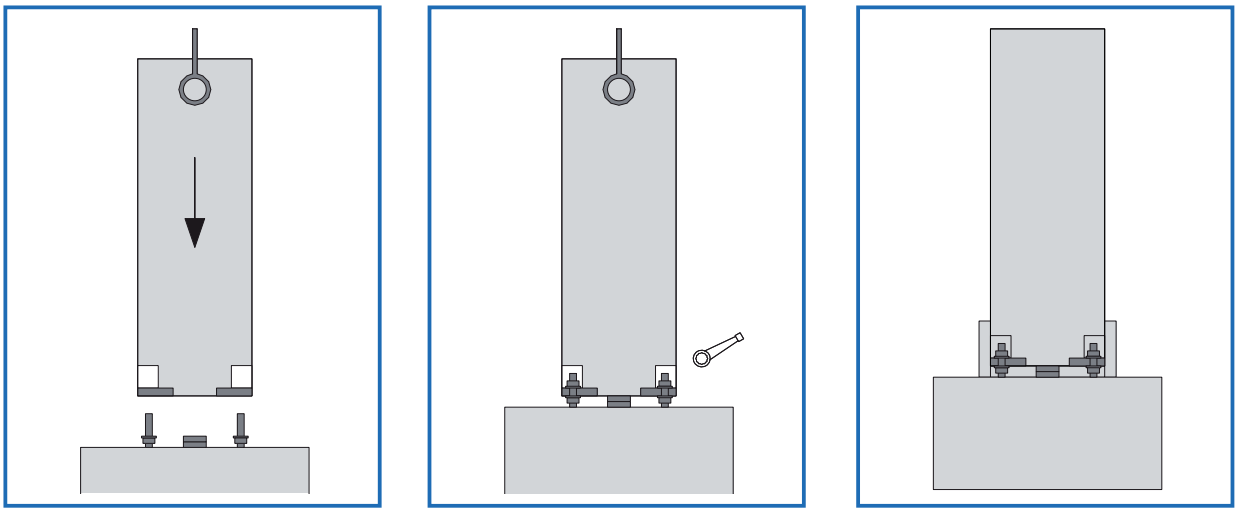

Table 8. Installation tolerances and the anchoring bolt's protrusion from the surface of concrete when column shoes are used.

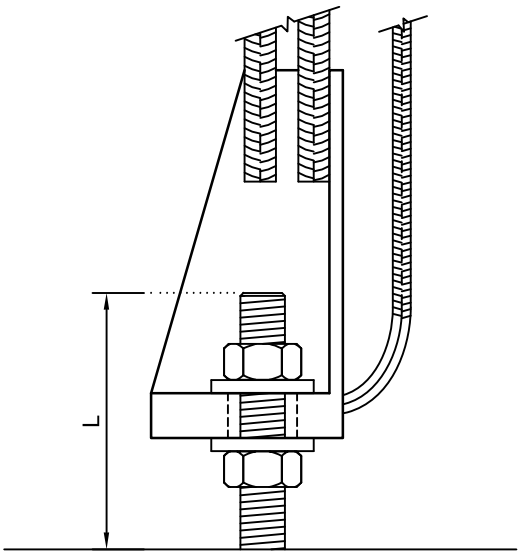

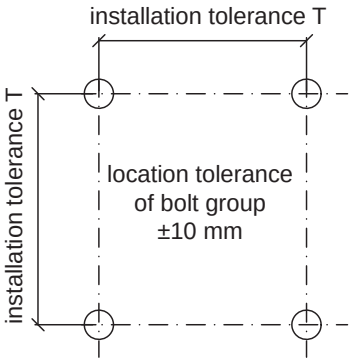

Column shoe	Anchor bolt	Grout thickness	Protrusion of the bolt L	Installation tolerance T
PEC 30	PPM 30	50	150	± 3
PEC 36	PPM 36	55	170	± 4
PEC 39	PPM 39	60	190	± 4
PEC 45	PPM 45	65	205	± 4
PEC 52	PPM 52	70	235	± 5

7. USING Peikko Designer®-SOFTWARE

The column connection module of the Peikko Designer® software is developed for dimensioning of column connections. Precast concrete column and steel column connections can be easily and quickly designed according to various norms e.g. Eurocode. From the program it is possible to export AutoCad blocks which include the geometry, connection parts and additional reinforcement. The software can be downloaded for free from www.peikko.com.

7.1 Instructions for use

1. Define design values of the forces (factored) in the column connection.
   N_d = design value of normal force [kN]
   M_d = design value of bending moment [kNm]
   V_d = desing value of shear force [kN]
   The additional bending moment caused by eccentric normal force must be added to the design value of the bending moment.
2. Choose settings used in the project
3. Choose columns and types used in the project
4. Choose materials
5. Choose shape of cross section and input measurements of column, base column and footing.
6. Input design values of the forces for final stage and erection stage. Several load cases can be input at the same time.
7. Choose desired column shoe and anchor bolt types
8. Input reinforcement information of the column
9. Calculate the resistance of the column
10. Compare the loading point to capacity curve. If point stays inside the curve, the capacity is adequate. Point is shown then in green color. In case shear force is affecting the connection, the resistance is shown on Shear Capacity page likewise erection stage resistance is shown on Erection stage page.

The initial data, results and connection part list of the calculation can be printed. More information about the Peikko Designer program from Peikko's technical support.

Figure 5. Peikko Designer® -dimensioning program.

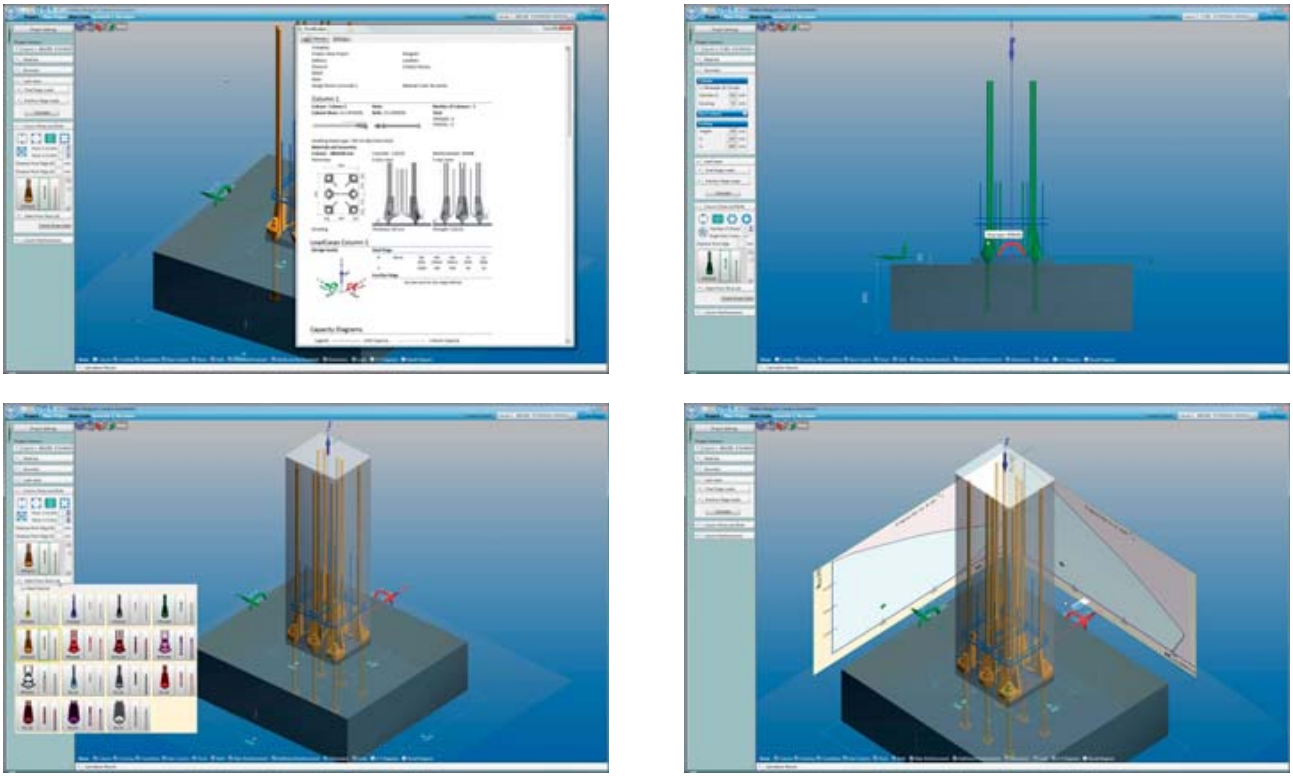

Peikko Group • www.peikko.com