peikko®

PSK WALL SHOE

CERTIFIED inspecta ORGANIZATION
ISO 9001
ISO 14001

Replaces the brochure 10/2003 • 11/2006

PSK WALL SHOE

Benefits of PSK wall shoe

- easy and fast element installation
- comfortable and fast bolt connection, no welding needed
- the mould remains solid
- strong tensile connection: enables element building of shearwalls
- vast size and capacity range
- invisible after installation
- Fully working connection once installed. The connection is functional and is able to transfer forces according to capacities during building process.

peikko®

CONCRETE CONNECTIONS

Peikko benefits

- reliable: passed demanding test program
- competitive price and delivery time
- economical and easy to use in designing, manufacturing and installation of the elements

CONTENTS

1. DESCRIPTION OF THE SYSTEM 4

2. DIMENSIONS AND MATERIALS 5

3. MANUFACTURING 6

3.1 Manufacturing method 6

3.2 Manufacturing markings 6

3.3 Quality control 6

4. CAPACITIES 6

5. APPLICATION 7

5.1 Principle of application 7

5.2 Limitations for application 7

5.3 Design principles 7

5.3.1 Dimensioning 7

5.3.2 Reinforcement of the precast wall 8

5.3.3 Edge and centre distances 9

5.3.4 The concrete cover thickness 9

5.3.5 Height level of the anchoring bolt 9

6. INSTALLATION 10

6.1 Installation tolerances of the wall shoe 10

6.2 Installation of the wall shoe 10

6.3 Erection of the precast wall 10

7. INSTALLATION CONTROL 10

7.1 Installation control of the wall 10

PSK WALL SHOE

1. DESCRIPTION OF THE SYSTEM

Peikko® PSK wall shoes are designed for tension splicing of wall-like precast elements. Wall shoes are used in e.g. buildings stiffening walls.

The loads are transferred from wall to load bearing structures with the help of wall shoes and anchoring bolts. Wall shoes are used with HPM and PPM anchoring bolts.

Figure 1. Wall shoes and overlapping bolts in a wall connection.

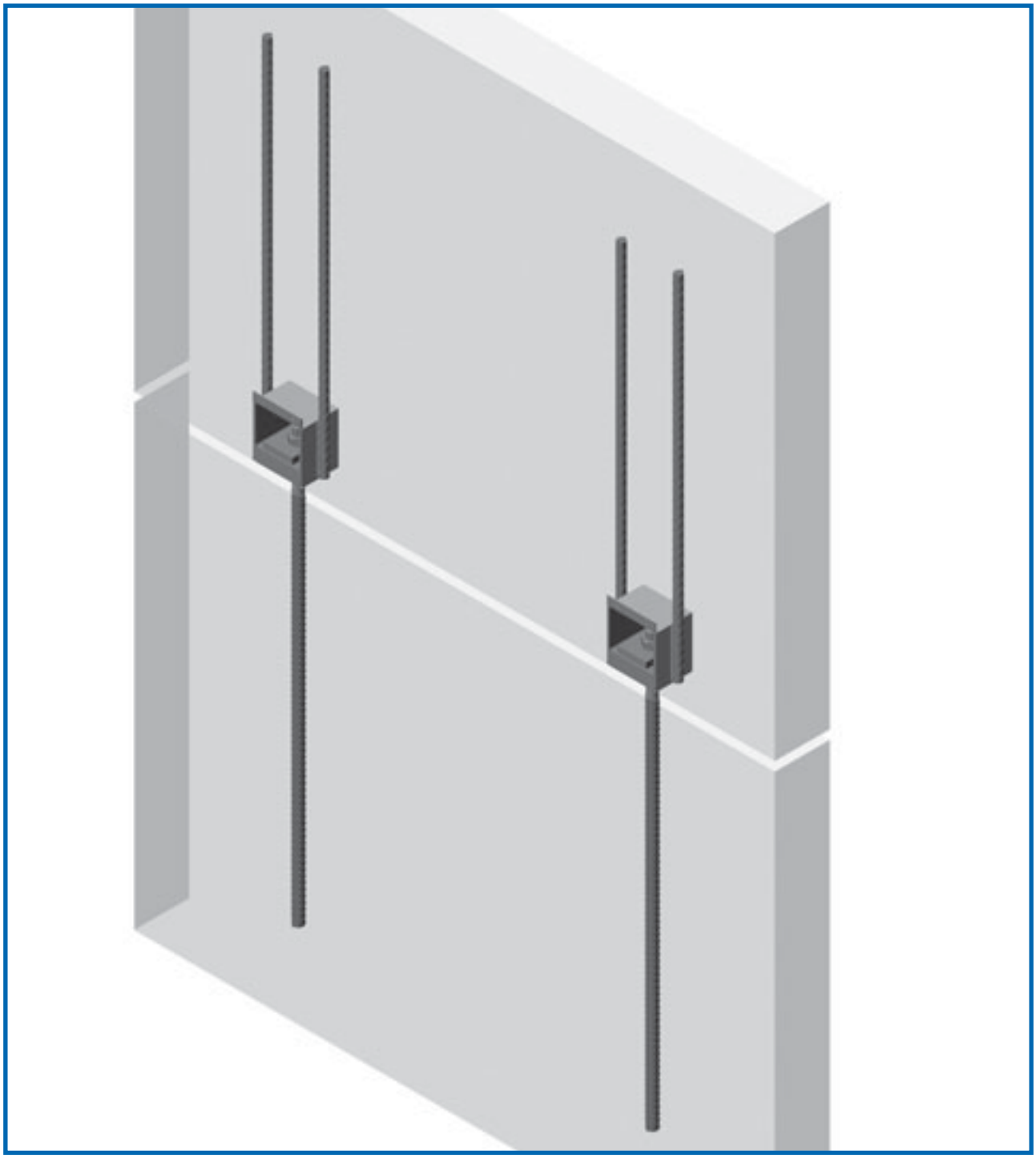

2. DIMENSIONS AND MATERIALS

Materials and standards:

plates	S355J2+N	EN 10025
sheet metal	S235JR	EN 10025
ribbed bars	A500HW	SFS 1215

Table 1. Dimensions [mm], weights [kg] and painting marks of the wall shoes.

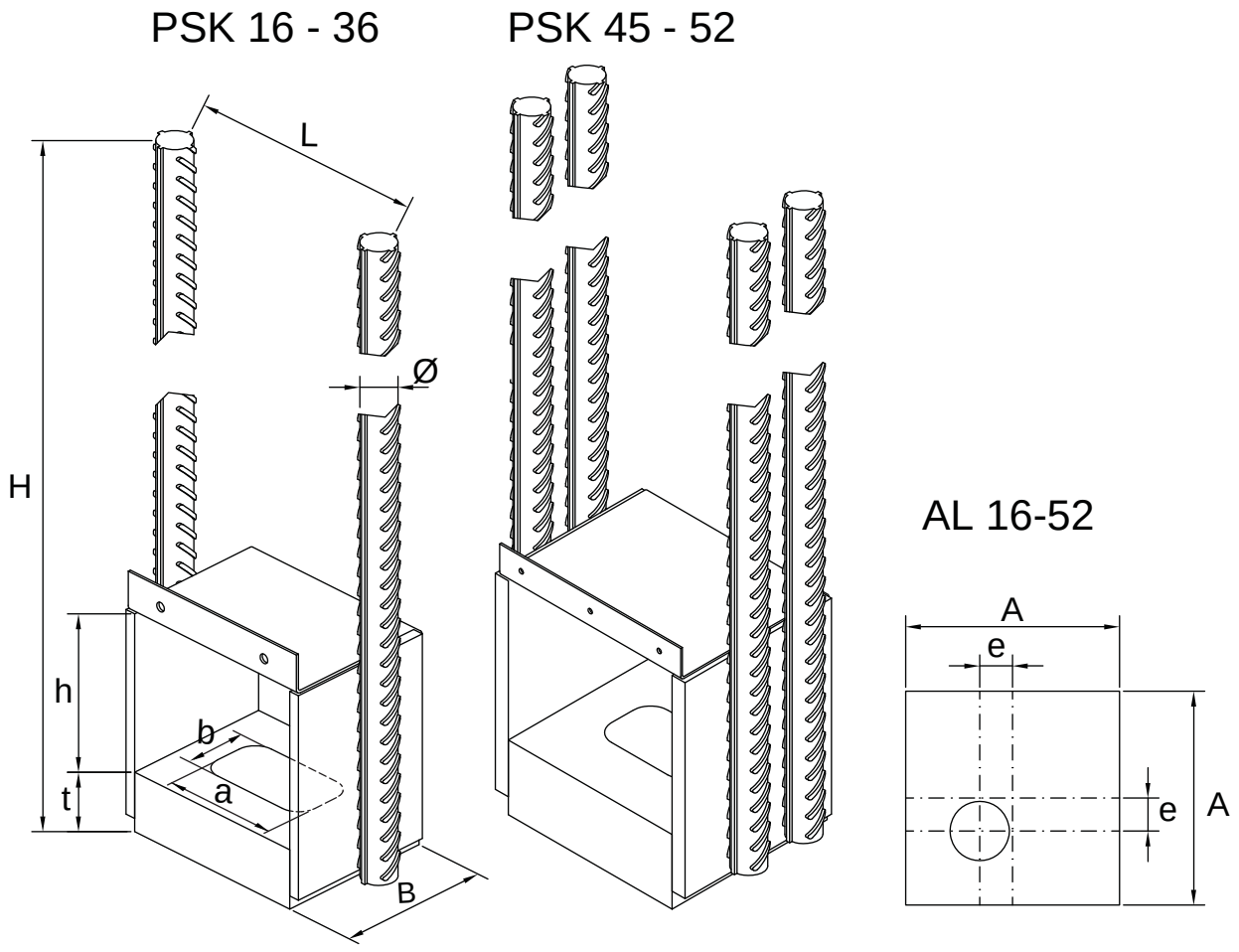

PSK	wall shoe								AL washer			weight	color
	H	B	L	t	h	Ø	a	b	A	e	s		
PSK 16	580	80	141	30	82	16	76	36	65	5	12	4.4	yellow
PSK 20	850	90	146	35	90	16	80	40	70	5	15	6.1	blue
PSK 24	960	120	166	35	100	20	84	44	80	10	20	10.1	grey
PSK 30	1170	120	185	45	120	25	90	50	95	10	20	16.8	green
PSK 36	1755	150	212	60	130	32	96	56	110	10	30	36.2	red
PSK 45	1940	180	252	80	160	32	105	65	130	10	35	75.8	violet
PSK 52	2520	200	288	80	185	32	112	72	160	10	40	102.3	white

3. MANUFAC-TURING

3.1 Manufacturing method

Plates	Flame or mechanical cutting
Ribbed bars	Mechanical cutting
Welding	MAG by hand or with a robot
Welding class	C (SFS-EN 25817)

3.2 Manufacturing markings

Products are marked with the mark of the Inspecta, the emblem of Peikko Group, the type of the product and a year and a week of manufacturing.

3.3 Quality control

The quality control involved in producing the steel parts conforms to the requirements set by the Finnish Code of Building Regulations. Peikko Finland Oy is under the Inspecta Certification for quality control.

PSK wall shoes have certified product declarations confirmed by the Concrete Association of Finland.

4. CAPACITIES

The calculations are made according to following regulations and instructions:
RakMK B4, regulations 2005 (Finnish Building Codes)
RakMK B7, regulations 1996 (Finnish Building Codes)

The capacities in table 3 are according to the Finnish Code of Building Regulations. If you need capacities according to other regulations, please contact Peikko's technical support.

The anchor bars of the wall shoe are calculated for concrete grade K30-2 (Finnish Code of Building Regulations). The wall shoes are dimensioned to the tensile force that comes from HPM or PPM anchor bolt. The capacities of the joints are related to the bolt used.

The bolt can be a short or a long type depending on where the bolt is going to be used. Thicker and bigger AL washers have to be used with the bolts used in connection with wall shoes.

Table 2. Capacity grades according to RakMK and ETA approval [kN/m]. *) achor bolts approval*

PSK	connecting bolt + washer	acc. to RakMK (concrete grade K30-2) N_u	acc. to ETA* N_{Rd}
PSK 16	HPM 16 + AL 16	65.4	61.7
PSK 20	HPM 20 + AL 20	102.1	96.3
PSK 24	HPM 24 + AL 24	147.1	138.7
PSK 30	HPM 30 + AL 30	233.8	220.4
PSK 36	PPM 36 + AL 36	476.6	435.7
PSK 45	PPM 45 + AL 45	761.8	696.5
PSK 52	PPM 52 + AL 52	1025.5	937.6

ETA (European Technical Approval) is an European technical product approval. ETA approval guarantees that a product fulfills requirements of construction and is suitable for use according to instructions. ETA approval guarantees also that capacities of the product are calculated according to methods generally approved in Europe and that independent organization is implementing quality control with manufacturing.

ETA approval grants the right to use CE-marking for the products.

5. APPLICATION

5.1 Principle of application

PSK wall shoes are used in tensile connections of shearwalls. Wall shoes transfer only tensile forces.

The pressure load in horizontal joint is transmitted via grouting of the joint.

The thickness of concrete cover surrounding the wall shoe must be adequate according to fire resistance, environmental exposure class and intented operating life.

5.2 Limitations for application

The capacities of the column shoe have been calculated for static loads. In the case of dynamic and fatigue loads, greater safety factors have to be used individually for each case. If the application conditions are below –20 °C, it is necessary to consider using plates with better cold impact resistance.

5.3 Design principles

5.3.1 Dimensioning

Forces inside the element are transferred from the wall shoe to the overlapping bolt by the reinforcement of the element. Single bar reinforcement might be needed in addition to the mesh.

The capacity of the reinforcement has to be the same as bolt's and wall shoe's capacity. The bar distances in the mesh must be ≤ 200 mm, in which case two vertical bars of the mesh can be regarded as active.

5.3.2 Reinforcement of the precast wall

The upper element is reinforced for the loads directed on the wall. The wall shoe anchors to the lower element. In each element the forces are transferred with the help of the element's reinforcement. The necessary reinforcement is selected according to table 3 and figure 2, either mesh + 2 additional reinforcement bars or mesh + 4 additional reinforcement bars.

The forces are transferred to the foundations trough anchoring bolts. Depending on the type of the foundation the bolts are either HPM/L and PPM/L short bolts or HPM/P and PPM/P long bolts.

Table 3. The amount of single additional bars when using mesh on both surfaces. The reinforcement must have either mesh + 2 additional reinforcement bars or mesh + 4 additional reinforcement bars. T = ribbed bar

	vertical bars of the mesh 4 pcs						
	T5	T6	T7	T8	T9	T10	T12
PSK 16	2T8	2T6	2T6	-	-	-	-
	4T6	4T6	-	-	-	-	-
PSK 20	2T12	2T10	2T8	2T6	-	-	-
	4T8	4T8	4T6	4T6	-	-	-
PSK 24	2T16	2T16	2T12	2T10	2T8	2T6	-
	4T10	4T10	4T8	4T8	4T6	4T6	-
PSK 30	2T20	2T20	2T20	2T16	2T16	2T16	2T8
	4T16	4T12	4T12	4T12	4T10	4T10	4T6
PSK 36	2T32	2T32	2T32	2T25	2T25	2T25	2T25
	4T20	4T20	4T20	4T20	4T20	4T20	4T16
PSK 45	-	-	-	-	2T32	2T32	2T32
	4T25	4T25	4T25	4T25	4T25	4T25	4T25
PSK 52	-	-	-	-	-	-	-
	4T32	4T32	4T32	4T32	4T32	4T32	4T32

Figure 2. Continuing the forces in pre-cast wall.

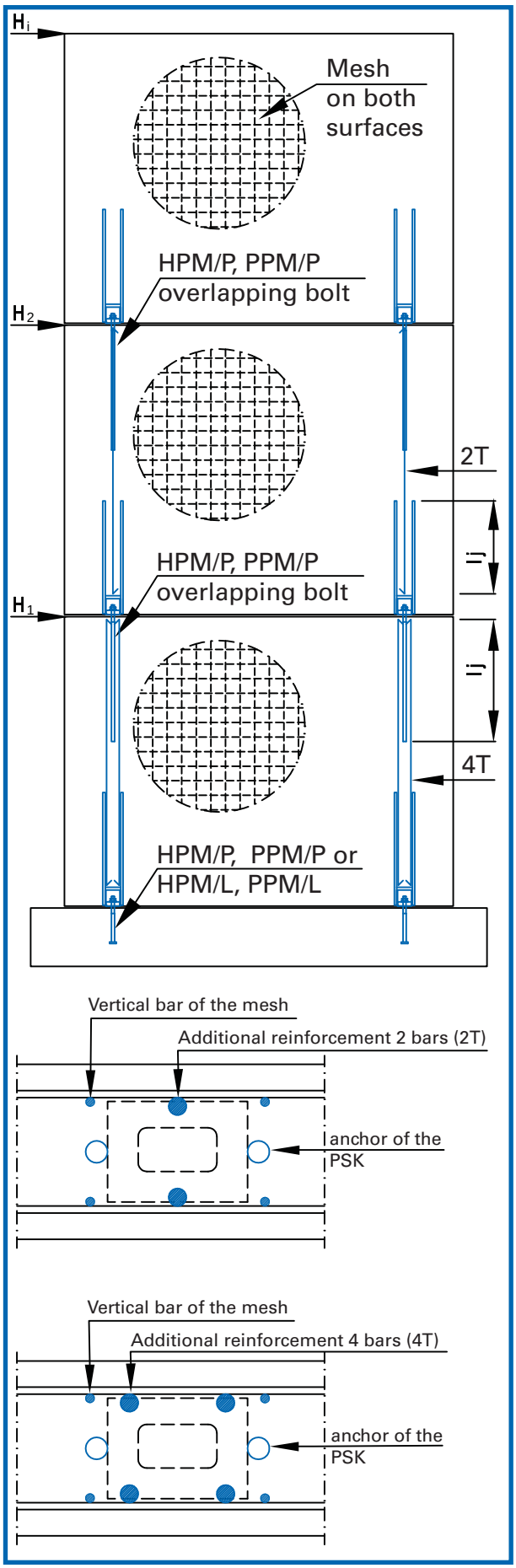

5.3.3 Edge and centre distances

Table 5. Edge and centre distances [mm].

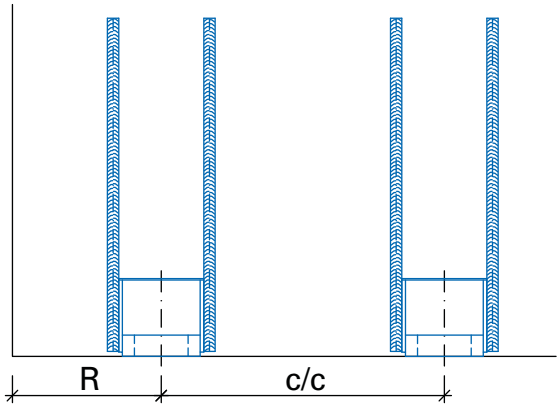

	R	c/c
PSK 16	150	300
PSK 20	150	300
PSK 24	190	380
PSK 30	220	440
PSK 36	270	540
PSK 45	290	580
PSK 52	310	620

5.3.4 The concrete cover thickness

The fire-resistance period and environment class, in which the wall shoe is situated, defines the concrete cover thickness. Concrete cover thickness is measured from bottom plate's front and rear surfaces.

5.3.5 Height level of the anchoring bolt

The joint thickness between the wall elements defines the height level of the bolt.

Table 6. Bolt's head height [mm] from element's upper surface with a 20 mm element joint.

connecting bolt	bolt's height
HPM 16	100
HPM 20	110
HPM 24	115
HPM 30	135
PPM 36	165
PPM 45	195
PPM 52	220

6. INSTALLATION

6.1 Installation tolerances of the wall shoe

Installation tolerance of the wall shoe in longitudinal direction of the bottom plate is ±25 mm and in horizontal direction ±5 mm.

6.2 Installation of the wall shoe

The wall shoe is attached to the mold for example by nails. The concrete cover thickness in front of the wall shoe is ensured by the installation piece.

Figure 3. Installation of the wall shoe.

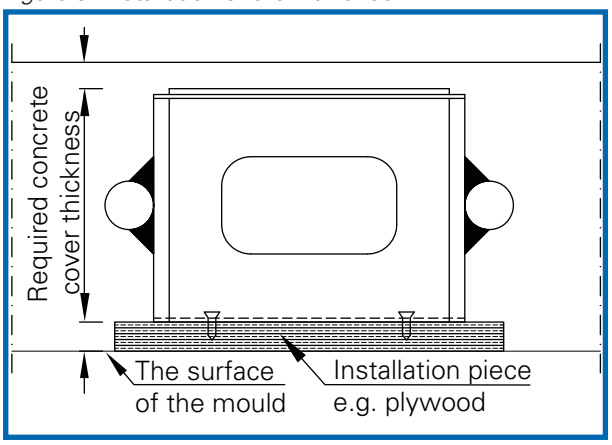

6.3 Erection of the precast wall

The pre-cast wall element is erected to correct height with the help of shims. The element has to be supported properly. The element has to be checked that it is in the right position and then the nuts are tightened. As the nuts are tightened, the washer must be turned inside the bottom plate's edges.

The lower joint of the element can be grouted afterwards or the element must be erected on fresh non-shrinking mortar. The joint mortar has to be according to Finnish Code of Building Regulations B4. The grouting has to be done before the upper structures are installed.

The casting boxes of the wall shoes have been designed according to DIN 7444.

7. INSTALLATION CONTROL

7.1 Installation control of the wall

Fastening must be done according to installation plan made by the designer.

The following must be checked:

- installation order
- support during installation
- bolt's tightening instructions
- instructions concerning the grouting

SKYJACK

Peikko Group • www.peikko.com